MURR ELEKTRONIK
stay connected

EXACT8, 8XM8, 3 POLE

Conn.M12 12 pole

8-way, 3-pole
M12 (12-pole)
Inline face or side mounting
Plastic housings with good resistance against chemicals and oils.
The resistance to aggressive media should be individually tested for your application. Further details on request.

Link to Product

Illustration

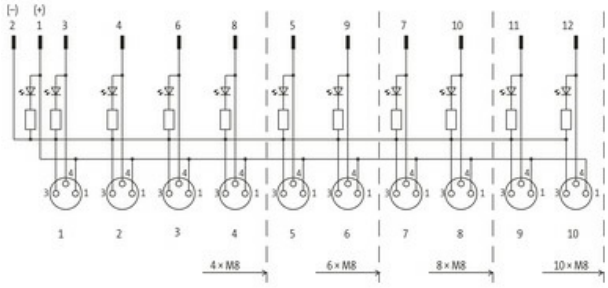

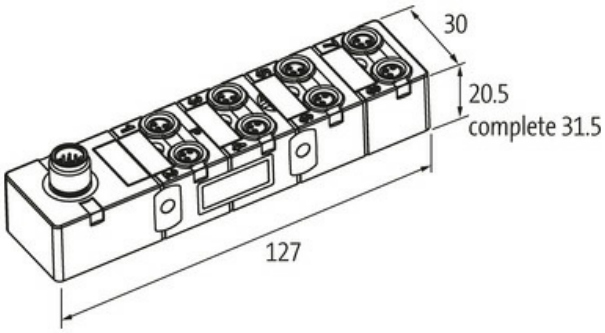

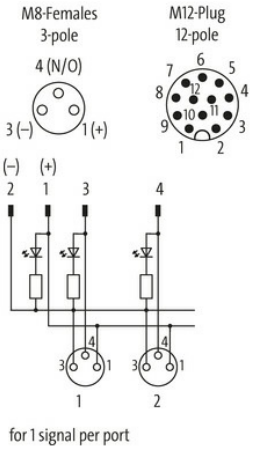

Product may differ from Image

Technical Data	
Operating voltage	24 V DC
Operating current per contact	max. 1.5 A
Protection	IP67 inserted and tightened (EN 60529)
Housing	Plastic, flame retardant

General data	
Temperature range	-20...+70 °C, depending on cable quality

Contact Layout	
PIN 1	(+)

The information in this brochure has been compiled with the utmost care.
Liability for the correctness completeness and topicality of the information is restricted to gross negligence. Version: 03/22

PIN 3	(-)
PIN 4	(NO)/(S1)
	LED (green): Power / LED (yellow): (S1)
Commercial data	
country of origin	DE
customs tariff number	85369010
EAN	4048879054515
eClass	27143423
Packaging unit	1.000

The information in this brochure has been compiled with the utmost care.
Liability for the correctness completeness and topicality of the information is restricted to gross negligence. Version: 03/22