MURR ELEKTRONIK
stay connected

MCS POWER SUPPLY 3-PHASE,

IN: 340-460VAC OUT: 24-28V/20ADC

INPUT: 3× 340...460 V AC
OUTPUT: 24...28 V DC
Current: 20 A

Link to Product

Illustration

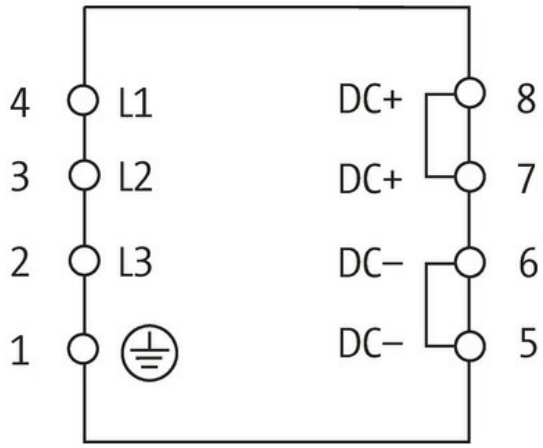

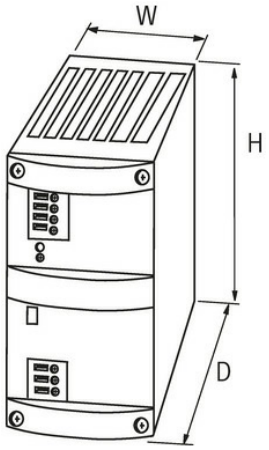

Product may differ from Image

General data	
Standards	IEC 61010-2-201, EN 61204-3, EN 55011 A
Mounting method	DIN-rail mountable TH35 (EN 60715)
Temperature range	0...+60 °C (storage temperature -25...+85 °C)
Relative humidity	30...90%, no condensation
Efficiency	90%
Dimensions H×W×D	170×84×201 mm

Output	
Output voltage	24 V DC (SELV), ±1%; 24...28 V adjustable
LED display	LED (green) for output voltage
Selectable switch-off mode	front sided plug link (automatic re-start or definite shut-off)
Output current	20 A (+60 °C); 20...24 A (+40 °C)

The information in this brochure has been compiled with the utmost care.
Liability for the correctness completeness and topicality of the information is restricted to gross negligence. Version: 03/22

Mains failure bridging time	min. 10 ms (400 V AC)
Ripple	max. 20 mV eff/rms
Spikes	max. 100 mV ss/pp
Unit protection	short-circuit and overload protected
Parallel usage/serial usage	yes/yes
Input	
Input voltage	3× 340...460 V AC
Primary fusing external	max. 3× 6 A
Input current	3× 1.4 A
Inrush current after 1 ms	max. 25 A
Frequency	50...60 Hz
Commercial data	
country of origin	CZ
customs tariff number	85044090
EAN	4048879080477
eClass	27049002
Packaging unit	1.000

The information in this brochure has been compiled with the utmost care.
Liability for the correctness completeness and topicality of the information is restricted to gross negligence. Version: 03/22