MURR ELEKTRONIK
stay connected

**M8 male 90° A-cod. / MSUD valve plug C-8mm small**

PVC 3x0.34 bk UL/CSA 0.3m

MSUD
Plastic housings with good resistance against chemicals and oils.
Form C (8 mm)
Male M8
90°
24 V AC ±20% / DC ±25%
4-pole
Z-Diode + LED
Art-No. 7005 - M8 Lite - (plastic hexagonal screw) on request
Further cable lengths on request.

**Link to Product**

**Illustration**

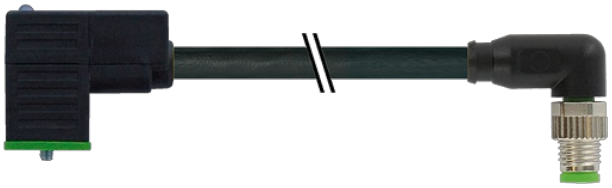

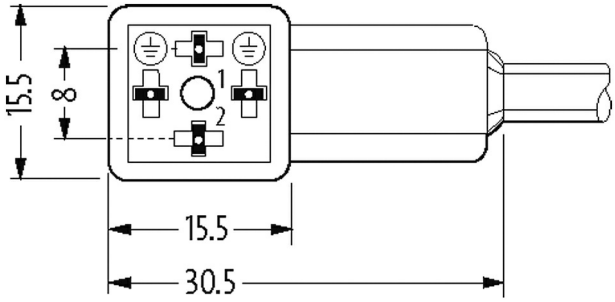


Height: 25 mm

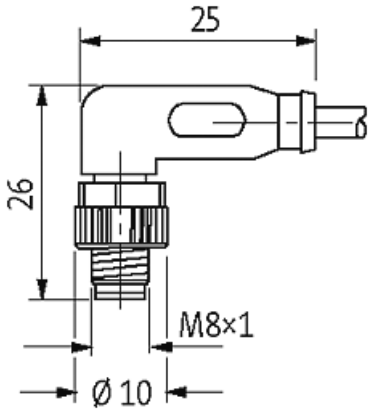


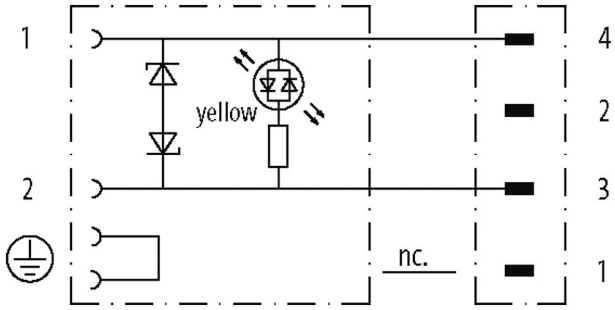


Female

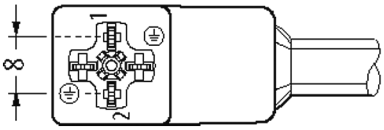


Male

Product may differ from Image

**Form**

| | |
|---|---|
| Form | 88451 |

The information in this brochure has been compiled with the utmost care.
Liability for the correctness completeness and topicality of the information is restricted to gross negligence. Version: 03/22

MURR ELEKTRONIK
stay connected

| Technical Data | |
|---|---|
| Operating voltage | 24 V AC ±20% / DC ±25% |
| Rated surge voltage | 0.8 kV |
| Operating current per contact | max. 4 A |
| No. of poles | 4 |
| Current consumption | 15 mA |
| Material group | IEC 60664-1, category I |
| Switch off peak | max. 55 V |
| LED display | yellow |
| Locking of ports | M2.5/M8 (recommended torque 0.4 Nm) |
| Compression gland | M8 (SW9) |
| Protection | IP65 and IP67 when plugged and screwed down (EN 60529) |
| Material | MSUD (PBT); M8 (PUR) |
| Locking material | Zinc die casting, matte nickel plated |
| suitable for corrugated tube (internal Ø) | 6.5 mm |
| Housing | Black plastic (gray on request) |
| Additional suppressor | Diode/Z-Diode |
| **General data** | |
| Standards | DIN EN 61076-2-104 (M8) |
| Mounting method | inserted, tightened |
| Material (contact) | Copper alloy |
| Material (contact surface) | MSUD (Ag); M8 (Au) |
| Material (gasket) | PUR |
| Pollution Degree | 3 |
| Temperature range | -25...+85 °C, depending on cable quality |
| **Cables** | |
| No./diameter of wires | 3× 0.34 mm² |
| Wire isolation | PVC (br, bl, bk) |
| Material (jacket) | PVC (UL/CSA) |
| Outer Ø | 4.6 mm ±5% |
| Bend radius (moving) | 10× outer Ø |
| Temperature range (fixed) | -30...+80 °C |
| Temperature range (mobile) | -5...+80 °C |
| Cable identification | 613 |
| Cable Type | 1 (PVC) |
| Approval (cable) | UL (AWM-Style 2464/1731), CSA |
| Cable weight [g/m] | 34,10 |
| Material (wire) | Cu wire, bare |
| Resistor (core) | max. 60 Ω/km (20 °C) |
| Single wire Ø (core) | 0.15 mm |
| Construction (core) | 19× 0.15 mm (multi-strand wire class 5) |
| AWG | similar to AWG 22 |
| Material (wire isolation) | PVC |
| Material property (wire isolation) | CFC-, cadmium-, silicone- and lead-free |
| Shore hardness (wire isolation) | 45 ±5 D |
| Wire-Ø incl. isolation | 1.25 mm ±5% |
| Color/numbering of wires | br, bk, bl |
| Stranding combination | 3 wires twisted |
| Shield | no |
| Material (jacket) | PVC |
| Material property (jacket) | CFC-, cadmium-, silicone- and lead-free |
| Shore hardness (jacket) | 85 ±5 A |
| Outer-Ø (jacket) | 4.6 mm ±5% |

The information in this brochure has been compiled with the utmost care.
Liability for the correctness completeness and topicality of the information is restricted to gross negligence. Version: 03/22

| | |
|---|---|
| Color (jacket) | black |
| chemical resistance | good resistance to oil, gasoline and chemicals |
| thermal resistance | flame retardant UL 1581 VW1 / CSA FT1 |
| Nominal voltage | UL 300 V AC |
| Test voltage | 2000 V AC |
| Current load capacity | to DIN VDE 0298-4 |
| Temperature range (fixed) | -30...+80 °C |
| Temperature range (mobile) | -5...+80 °C |
| Bend radius (fixed) | 5× outer Ø |
| Bend radius (moving) | 10× outer Ø |
| Jacket Color | black |
| **Commercial data** | |
| country of origin | CZ |
| customs tariff number | 85444290 |
| EAN | 4048879119245 |
| eClass | 27279218 |
| Packaging unit | 1 |

The information in this brochure has been compiled with the utmost care.
Liability for the correctness completeness and topicality of the information is restricted to gross negligence. Version: 03/22