M12 male 0° / M12 female 0° D-cod. shielded

PUR 1x4xAWG22 shielded gn UL/CSA+robot 1m

Ethernet CAT5
Male straight – female straight
M12 – M12, 4-pole
D-coded
shielded
Further cable lengths on request.
Plastic housings with good resistance against chemicals and oils.
The resistance to aggressive media should be individually tested for your application. Further details on request.

Link to Product

Illustration

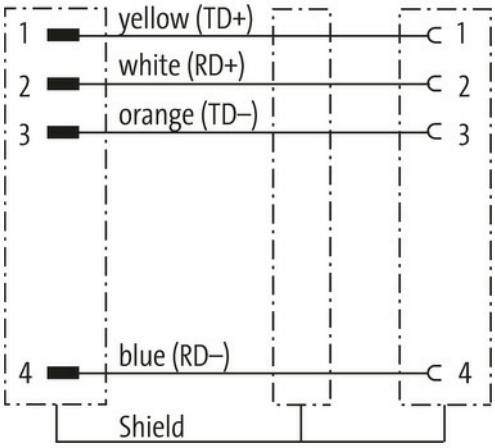

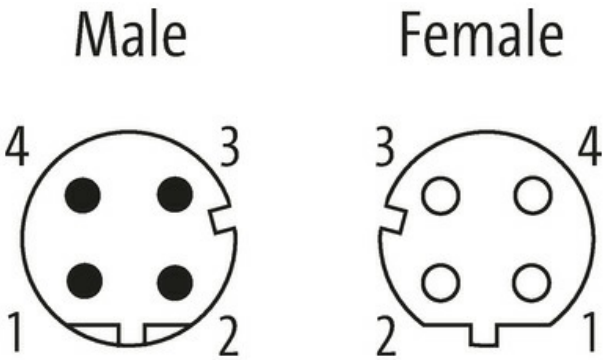

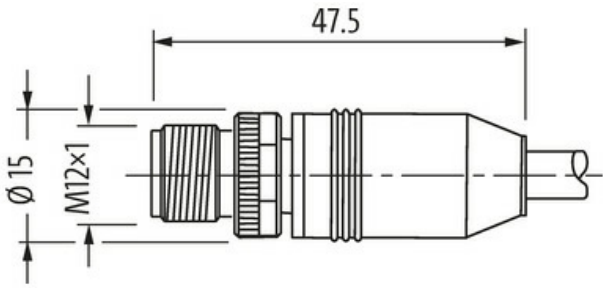

The information in this brochure has been compiled with the utmost care.
Liability for the correctness completeness and topicality of the information is restricted to gross negligence. Version: 03/22

MURR ELEKTRONIK
stay connected

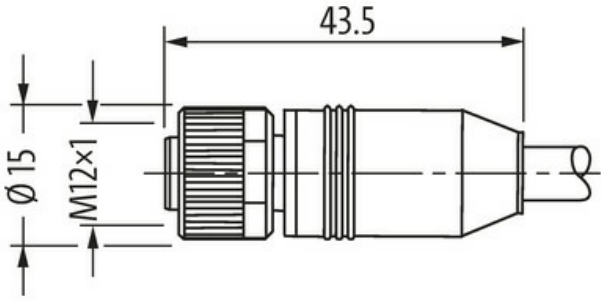

Product may differ from Image

* only for products with UL/CSA approved cable

Form	
Form	44571
Technical Data	
Operating voltage	max. 60 V DC
Operating voltage (only UL listed)	max. 30 V DC
Rated surge voltage	1.5 kV
Operating current per contact	max. 4 A
Transfer parameters	CAT5, Class D (ISO/IEC 11801:2002), (EN 50173-1)
Transfer rate	up to 100 Mbit/s full duplex
Material group	IEC 60664-1, category I
Coding	M12, D-coded
Locking of ports	Screw thread (M12×1 mm) recommended torque 0.6 Nm, self-securing
Compression gland	M12 (SW13)
Protection	IP65, IP66K, IP67 inserted and tightened (EN 60529)
Material	PUR
Locking material	Zinc die casting, matte nickel plated
suitable for corrugated tube (internal Ø)	without
General data	
Standards	DIN EN 61076-2-101 (M12)
Pollution Degree	3
Temperature range	-25...+85 °C, depending on cable quality
Cables	
Cable identification	793
Approval (cable)	cURus (AWM style 20549/10578); CE compliant
Cable weight [g/m]	69,3 g
Material (wire)	Cu wire, tin plated
Resistor (core)	max. 60 Ω/km (20 °C)
Single wire Ø (core)	0.16 mm
Construction (core)	19× 0.160 mm
Diameter (core)	1× 4× AWG22/19
Material (wire isolation)	PE
Wire-Ø incl. isolation	1.6 mm ±5%
Color/numbering of wires	wh, ye, bl, or

The information in this brochure has been compiled with the utmost care.
Liability for the correctness completeness and topicality of the information is restricted to gross negligence. Version: 03/22

Shield	yes
optical shield cover	min. 85%
Material (jacket)	PUR
Outer-Ø (jacket)	6.6 mm ±5%
Color (jacket)	green
chemical resistance	Oil resistance IEC 60811-2-1, ASTM Öle 1, ICEA S-82-552 Std.
thermal resistance	flame-retardant according to UL 1581 section 1090, section 1100 (FT2), IEC 60332-1-2 Std.
Nominal voltage	300 V
Test voltage	2000 V AC (test duration 1 min)
Temperature range (fixed)	-40...+80 °C
Temperature range (mobile)	-20...+60 °C
Bend radius (fixed)	8× outer Ø
Bend radius (moving)	12× outer Ø
Torsion stress	±180°/m
No. of torsion cycles	max. 4 Mio. (25 °C)
Commercial data	
country of origin	DE
customs tariff number	85444290
EAN	4048879424974
eClass	27061801
Packaging unit	1.000

The information in this brochure has been compiled with the utmost care.
Liability for the correctness completeness and topicality of the information is restricted to gross negligence. Version: 03/22