M8 male 90° A-cod. / MSUD valve plug A-18mm

PVC 3x0.34 ye UL/CSA 0.3m

MSUD
Further cable lengths on request.
Form A (18 mm)
4-pole
Male M8
90°
3-pole
24 V AC ±20% / DC ±25%
Z-Diode + LED
Art-No. 7005 - M8 Lite - (plastic hexagonal screw) on request

Link to Product

Illustration

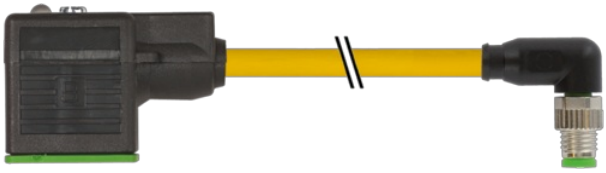

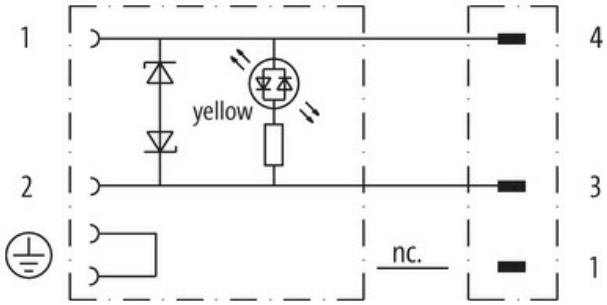

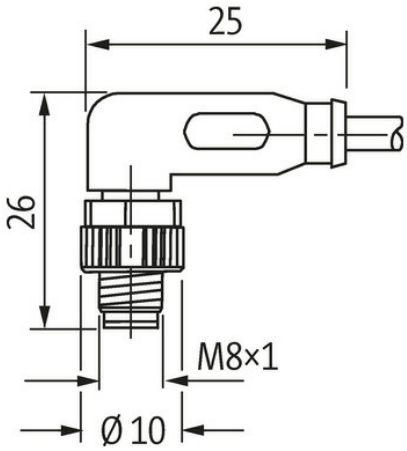

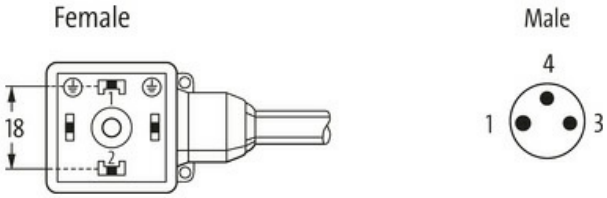

The information in this brochure has been compiled with the utmost care.
Liability for the correctness completeness and topicality of the information is restricted to gross negligence. Version: 03/22

MURR ELEKTRONIK
stay connected

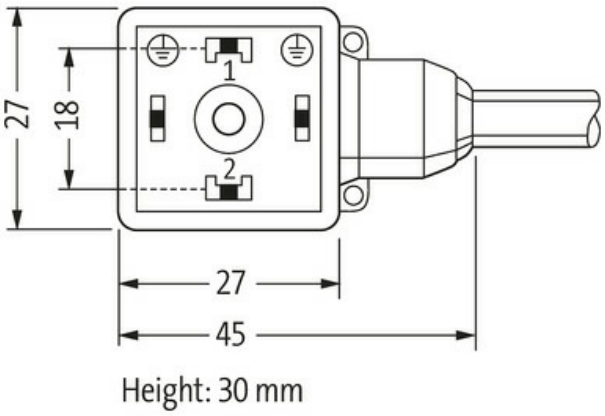

Product may differ from Image

Form	
Form	88721
Technical Data	
Operating voltage	24 V AC ±20% / DC ±25%
Rated surge voltage	0.8 kV
Operating current per contact	max. 4 A
No. of poles	MSUD (4); M8 (3)
Current consumption	15 mA
Material group	IEC 60664-1, category I
Switch off peak	max. 55 V
LED display	yellow
Locking of ports	M3/M8 (recommended torque 0.4 Nm)
Compression gland	M8 (SW9)
Protection	IP65 and IP67 when plugged and screwed down (EN 60529)
Material	MSUD (PBT); M8 (PUR)
Locking material	Zinc die casting, matte nickel plated
suitable for corrugated tube (internal Ø)	6.5 mm
Housing	Black plastic (gray on request)
Additional suppressor	Diode/Z-Diode
General data	
Standards	DIN EN 61076-2-104 (M8)
Mounting method	inserted, tightened
Material (contact)	Copper alloy
Material (contact surface)	MSUD (Ag); M8 (Au)
Material (gasket)	PUR
Pollution Degree	3
Temperature range	-25...+85 °C, depending on cable quality
Cables	
Cable identification	013
Cable Type	1 (PVC)
Approval (cable)	cURus (AWM-Style 2464/1731), CE-conform
Cable weight [g/m]	34,1 g
Material (wire)	Cu wire, bare

The information in this brochure has been compiled with the utmost care.
Liability for the correctness completeness and topicality of the information is restricted to gross negligence. Version: 03/22

Resistor (core)	max. 57 Ω/km (20 °C)
Single wire Ø (core)	0.15 mm
Construction (core)	19× 0.15 mm (multi-strand wire class 5)
Diameter (core)	3× 0.34 mm²
AWG	similar to AWG 22
Material (wire isolation)	PVC
Material property (wire isolation)	CFC-, cadmium-, silicone- and lead-free
Shore hardness (wire isolation)	45 ±5 D
Wire-Ø incl. isolation	1.25 mm ±5%
Color/numbering of wires	br, bk, bl
Stranding combination	3 wires twisted
Shield	no
Material (jacket)	PVC
Material property (jacket)	CFC-, cadmium-, silicone- and lead-free
Shore hardness (jacket)	85 ±5 A
Outer-Ø (jacket)	4.6 mm ±5%
Color (jacket)	yellow
chemical resistance	good resistance to oil, gasoline and chemicals
thermal resistance	flammwidrig nach UL 1581 VW1 / CSA FT1 / IEC 60332-1-2
Nominal voltage	UL 300 V AC
Test voltage	2000 V AC
Current load capacity	to DIN VDE 0298-4
Temperature range (fixed)	-30...+80 °C
Temperature range (mobile)	-5...+80 °C
Bend radius (fixed)	5× outer Ø
Bend radius (moving)	10× outer Ø
Commercial data	
country of origin	CZ
customs tariff number	85444290
EAN	4048879118057
eClass	27279218
Packaging unit	1.000

The information in this brochure has been compiled with the utmost care.
Liability for the correctness completeness and topicality of the information is restricted to gross negligence. Version: 03/22