MURR ELEKTRONIK
stay connected

PRE-WIRED CAP FOR EXACT8, 6XM8, 4-POL

15.0m PUR/PVC 12x0.34+2x0,75

for 6-way distribution box, 4-pole
Further cable lengths on request.
Plastic housings with good resistance against chemicals and oils.
The resistance to aggressive media should be individually tested for your application. Further details on request.
PUR/PVC
15.0 m

Link to Product

Illustration

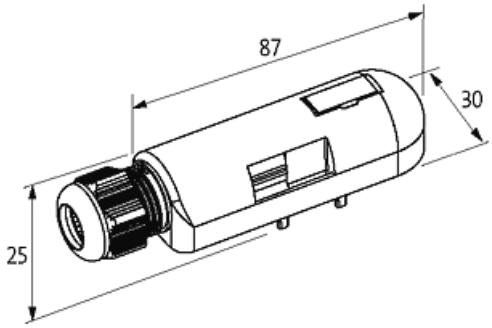

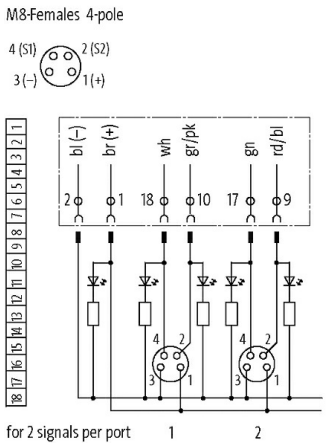

Product may differ from Image

Technical Data	
Housing	Plastic, flame retardant
Total current	max. 8 A
General data	
Temperature range	-20...+80 °C, depending on cable quality
Cables	
Cable number	386
No./diameter of wires	12× 0.34 + 2× 0.75 mm²

The information in this brochure has been compiled with the utmost care.
Liability for the correctness completeness and topicality of the information is restricted to gross negligence. Version: 03/22

Wire isolation	PVC
C-track properties	1.5 Mio.
Jacket Color	gray
Material (jacket)	PUR/PVC
Outer Ø	8.8 mm ±5%
Bend radius (fixed)	10× outer Ø
Bend radius (moving)	12× outer Ø
Temperature range (fixed)	-30...+70 °C
Temperature range (mobile)	-5...+60 °C
Color (jacket)	gray
Commercial data	
country of origin	CZ
customs tariff number	85444290
EAN	4048879298445
eClass	27143423
Packaging unit	1

The information in this brochure has been compiled with the utmost care.
Liability for the correctness completeness and topicality of the information is restricted to gross negligence. Version: 03/22