M12 male 90° / M12 female 0° A-cod. shielded

PUR AWG24+22 shielded vt UL/CSA+drag ch. 1.7m

DeviceNet, CANopen
Male 90° – female straight
M12 – M12, 4-pole
shielded
Plastic housings with good resistance against chemicals and oils.
The resistance to aggressive media should be individually tested for your application. Further details on request.
Further cable lengths on request.

Link to Product

Illustration

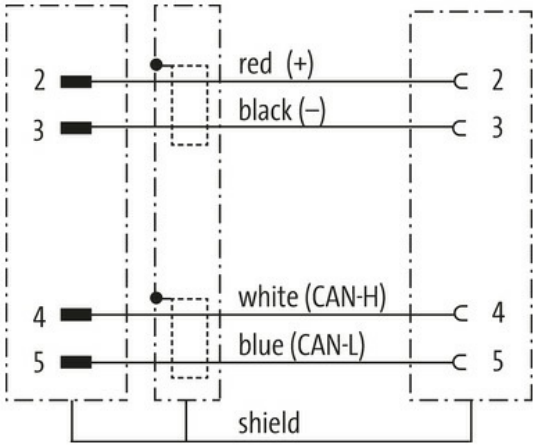

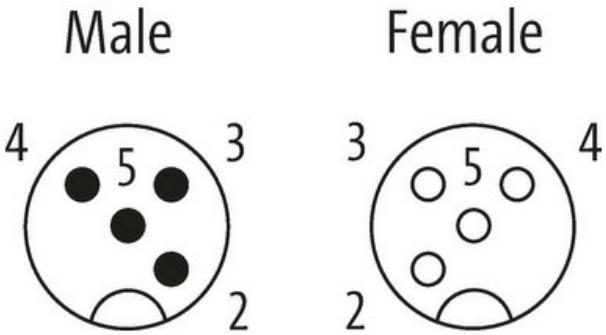

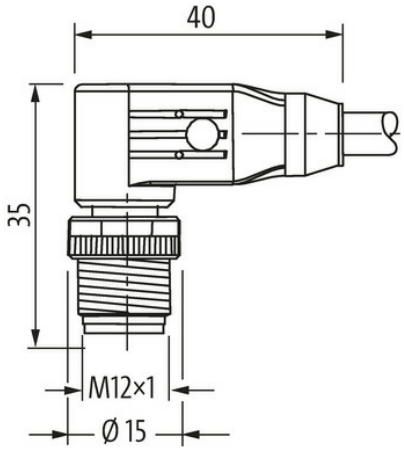

The information in this brochure has been compiled with the utmost care.
Liability for the correctness completeness and topicality of the information is restricted to gross negligence. Version: 03/22

MURR ELEKTRONIK
stay connected

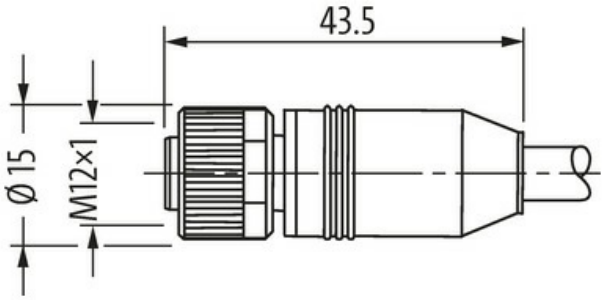

Product may differ from Image

* only for products with UL/CSA approved cable

Form	
Form	40233
Technical Data	
Operating voltage	max. 60 V AC/DC
Rated surge voltage	1.5 kV
Operating current per contact	max. 4 A
No. of poles	4
Material group	IEC 60664-1, category I
Locking of ports	Screw thread (M12×1 mm) recommended torque 0.6 Nm, self-securing
Compression gland	M12 (SW13)
Protection	IP67 inserted and tightened (EN 60529)
Material	PUR
Locking material	Zinc die casting, nickel-plated
General data	
Mounting method	inserted, tightened
Pollution Degree	3
Temperature range	-25...+85 °C, depending on cable quality
Cables	
Cable identification	803
Approval (cable)	cURus (AWM style 20549/10578); CE compliant
Cable weight [g/m]	63,12 g
Material (wire)	Cu wire, tin plated
Resistor (core)	max. 78 Ω/km (data pair, max. 54 Ω/km (power pair); (20 °C)
AWG	similar to AWG 24 (0.25 mm²); similar to AWG 22 (0.34 mm²)
Wire-Ø incl. isolation	2.1 mm ±5% (0.25 mm²); 1.5 mm ±5% (0.34 mm²)
Color/numbering of wires	wh, bl (data pair); bk, rd (power pair)
Shield	yes
optical shield cover	min. 65%
Material (jacket)	PUR
Outer-Ø (jacket)	6.9 mm ±5%
Color (jacket)	violet
thermal resistance	flame-retardant according to UL 1581 section 1090, section 1100 (FT2), IEC 60332-1-2 Std.
Nominal voltage	300 V
Test voltage	2000 V AC (test duration 1 min)
Temperature range (fixed)	-40...+80 °C
Temperature range (mobile)	-30...+70 °C
Bend radius (fixed)	6× outer Ø

The information in this brochure has been compiled with the utmost care.
Liability for the correctness completeness and topicality of the information is restricted to gross negligence. Version: 03/22

Bend radius (moving)	10× outer Ø
No. of bending cycles (C-track)	max. 1 Mio. (25 °C)
Travel speed (C-track)	max. 3 m/s
Acceleration (C-track)	max. 5 m/s²
Commercial data	
country of origin	CZ
customs tariff number	85444290
EAN	4048879682237
eClass	27279218
Packaging unit	1.000

The information in this brochure has been compiled with the utmost care.
Liability for the correctness completeness and topicality of the information is restricted to gross negligence. Version: 03/22