MURR ELEKTRONIK
stay connected

M8 ADAPTOR ON TOP / MSUD VALVE PLUG FORM C 8MM

Adapter
Form C (8 mm) – M8, connector top entry
24 V AC ±20% / DC ±25%
LED and suppression
3-pole
Plastic housings with good resistance against chemicals and oils.
The resistance to aggressive media should be individually tested for your application. Further details on request.

Link to Product

Illustration

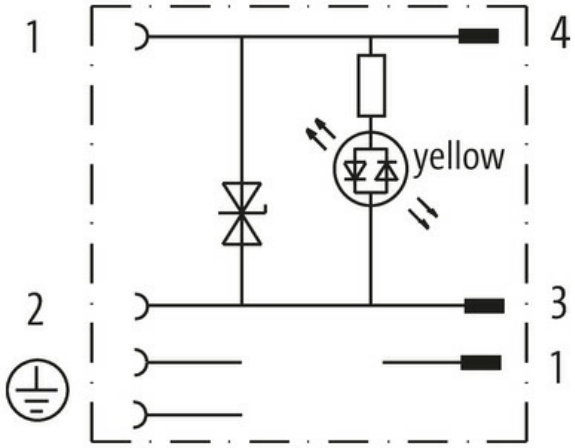

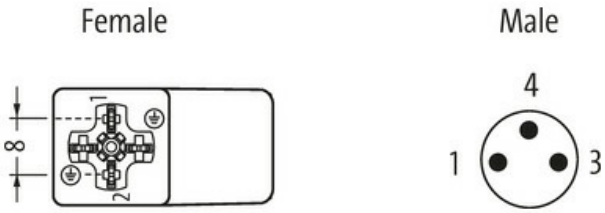

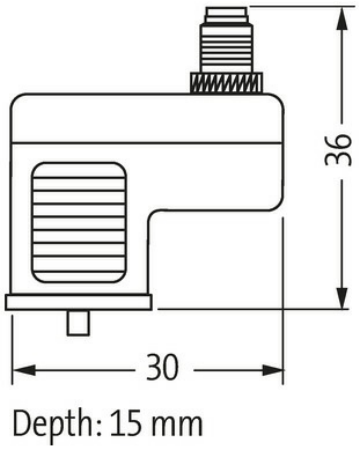

Product may differ from Image

Form	
Form	88965

Technical Data	
Operating voltage	24 V AC ±20% / DC ±25%
Rated surge voltage	0.8 kV
Operating current per contact	max. 4 A

The information in this brochure has been compiled with the utmost care.
Liability for the correctness completeness and topicality of the information is restricted to gross negligence. Version: 03/22

Current consumption	max. 15 mA
Switch off peak	max. 55 V
Locking of ports	M3/M8 (recommended torque 0.4 Nm)
Protection	IP67 inserted and tightened (EN 60529)
Configuration	2 contacts + bridged PE
General data	
Temperature range	-25...+85 °C
Commercial data	
country of origin	CZ
customs tariff number	85366990
EAN	4048879347426
eClass	27143423
Packaging unit	1.000

The information in this brochure has been compiled with the utmost care.
Liability for the correctness completeness and topicality of the information is restricted to gross negligence. Version: 03/22