MURR ELEKTRONIK
stay connected

MST 1-PHASE CONTROL AND ISOLATION TRANSFORMER

P: 2500VA IN: 230/400VAC +/- 15VAC OUT: 2x115VAC

Single-phase - Control and Isolation Transformers
2500 VA
Isolation class T 40/B

Link to Product

Illustration

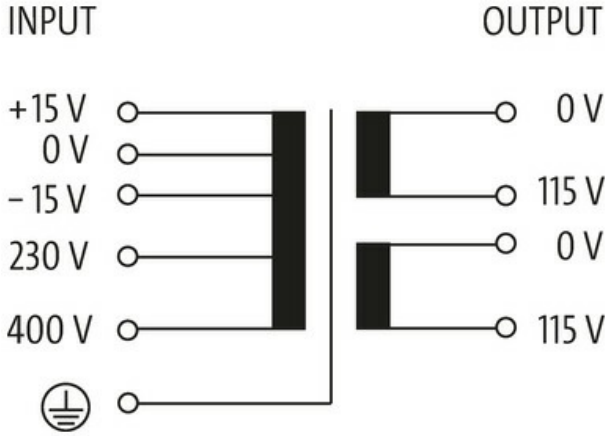

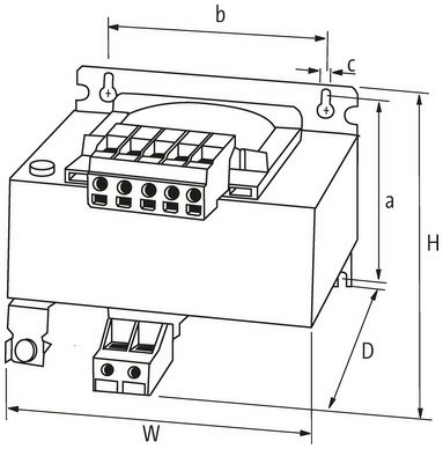

Product may differ from Image

General data

Standards	EN 61558-1, EN 61558-2-4, EN 62041 category 0
Mounting method	Long-hole mounting
Temperature range	-20...+40 °C, no condensation
Test isolation voltage	5.8 kV (prim./sec.)
Drill hole Ø	10×18 mm
Fixing centers a×b×c	150×150×10 mm

The information in this brochure has been compiled with the utmost care.
Liability for the correctness completeness and topicality of the information is restricted to gross negligence. Version: 03/22

Dimensions H×W×D	182×192×196 mm
Output	
Output voltage	1× 230, 1× 115, 2× 115 V AC
Output rating	2500 VA
Input	
Input voltage	230/400 ±15 V AC
Inrush current	234 A (230 V AC); 107 A (400 V AC)
Short-circuit current	532 A (230 V AC); 302 A (400 V AC)
Input current	11.4 A (230 V AC); 6.6 A (400 V AC)
Frequency	50...60 Hz
Commercial data	
country of origin	CZ
customs tariff number	85043200
EAN	4048879366892
eClass	27031302
Packaging unit	1.000

The information in this brochure has been compiled with the utmost care.
Liability for the correctness completeness and topicality of the information is restricted to gross negligence. Version: 03/22