HDFK 4 - Panel feed-through terminal block

0707086

https://www.phoenixcontact.com/gb/products/0707086

Please be informed that the data shown in this PDF document is generated from our online catalog. Please find the complete data in the user documentation. Our general terms of use for downloads are valid.

Panel feed-through terminal block, connection method: Screw connection with tension sleeve, Screw connection with tension sleeve, number of positions: 1, load current: 32 A, cross section: 0.2 mm^2 - 6 mm^2, connection direction of the conductor to plug-in direction: 0 °, width: 8.1 mm, color: gray

Your advantages

- Well-known connection principle allows worldwide use
- Low temperature rise, thanks to maximum contact force
- Tool-free snap-in principle enables easy mounting on the device panel
- Automatic panel thickness compensation enables universal use

Commercial data

Item number	0707086
Packing unit	50 pc
Minimum order quantity	50 pc
Sales key	AA1AAA
Product key	AA1AAA
GTIN	4017918003869
Weight per piece (including packing)	8.576 g
Weight per piece (excluding packing)	8.542 g
Customs tariff number	85369010
Country of origin	GR

Technical data

Product properties

Product type	Panel feed-through terminal block
Product family	HDFK 4
Number of positions	1
Pitch	8.1 mm
Number of connections	2
Number of rows	1
Number of potentials	1

Insulation characteristics

Overvoltage category	III
Degree of pollution	3

Electrical properties

Properties

Nominal current I_N	32 A
Nominal voltage U_N	400 V (With metal panels of 1 mm ... 2.5 mm)
Rated voltage (III/3)	400 V
Rated surge voltage (III/3)	6 kV

Connection data

Connection technology

Connector system	HDFK 4
Nominal cross section	4 mm²

Conductor connection exterior

Connection method	Screw connection with tension sleeve
Connection direction of the conductor to plug-in direction	0 °
Conductor cross section rigid	0.2 mm² ... 6 mm²
Conductor cross section flexible	0.2 mm² ... 4 mm²
Conductor cross section flexible, with ferrule without plastic sleeve	0.25 mm² ... 4 mm²
Conductor cross section, flexible, with ferrule, with plastic sleeve	0.25 mm² ... 4 mm²
2 conductors with same cross section, solid	0.2 mm² ... 1.5 mm²
2 conductors with same cross section, flexible	0.2 mm² ... 1.5 mm²
2 conductors with same cross section, flexible, with ferrule without plastic sleeve	0.25 mm² ... 1.5 mm²
2 conductors with the same cross section, flexible, with TWIN ferrule with plastic sleeve	0.5 mm² ... 2.5 mm²
Internal cylindrical gage	A4
Stripping length	9 mm
Tightening torque	0.6 Nm ... 0.8 Nm

Conductor connection interior

Connection method	Screw connection with tension sleeve
Connection direction of the conductor to plug-in direction	0 °
Conductor cross section rigid	0.2 mm² ... 6 mm²
Conductor cross section flexible	0.2 mm² ... 4 mm²
Conductor cross section flexible, with ferrule without plastic sleeve	0.25 mm² ... 4 mm²
Conductor cross section, flexible, with ferrule, with plastic sleeve	0.25 mm² ... 4 mm²
2 conductors with same cross section, solid	0.2 mm² ... 1.5 mm²
2 conductors with same cross section, flexible	0.2 mm² ... 1.5 mm²
2 conductors with same cross section, flexible, with ferrule without plastic sleeve	0.25 mm² ... 1.5 mm²
2 conductors with the same cross section, flexible, with TWIN ferrule with plastic sleeve	0.5 mm² ... 2.5 mm²
Internal cylindrical gage	A4
Stripping length	9 mm
Tightening torque	0.6 Nm ... 0.8 Nm

Mounting

Panel thickness	1 mm...4 mm

Material specifications

Material data - contact

Note	WEEE/RoHS-compliant, free of whiskers according to IEC 60068-2-82/JEDEC JESD 201
Contact material	Cu alloy
Surface characteristics	tin-plated

Material data - housing

Color (Housing)	gray (7042)
Insulating material	PA
Insulating material group	I
CTI according to IEC 60112	600
Flammability rating according to UL 94	V0
Glow wire flammability index GWFI according to EN 60695-2-12	850
Glow wire ignition temperature GWIT according to EN 60695-2-13	775
Temperature for the ball pressure test according to EN 60695-10-2	125 °C

Notes

Safety note

Safety note	• Only electrically qualified personnel may install and operate the product. To recognize and prevent danger, the qualified personnel must be familiar with the basics of electrical engineering.

	• Observe the technical data provided here and refer to the documents listed under “Downloads”. The download area contains important information, such as installation notes, technical drawings, and 3D data.
	• The cable entry funnel is not safe to touch. Never connect or disconnect the terminal when it is energized. Take appropriate steps to ensure touch protection.
	• There is no electrical contact to the housing. Make sure that protective grounding is provided for green/yellow color variants and articles marked with PE.

Dimensions

Dimensional drawing	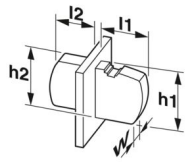
Pitch	8.1 mm
Width [w]	8.1 mm
Height [h]	21 mm

External dimensions

Width [w]	8.1 mm
Height [h1]	21 mm
Length [l1]	20 mm

Internal dimensions

Width [w]	8.1 mm
Height [h2]	21 mm
Length [l2]	15 mm

Mechanical tests

Test for conductor damage and slackening

Specification	IEC 60947-7-1:2009-04
Result	Test passed

Pull-out test

Specification	IEC 60947-7-1:2009-04
Conductor cross section/conductor type/tractive force setpoint/actual value	0.2 mm² / solid / > 10 N
	0.2 mm² / flexible / > 10 N
	6 mm² / solid / > 80 N
	4 mm² / flexible / > 60 N

Electrical tests

Temperature-rise test

Specification	IEC 60947-7-1:2009-04

Requirement temperature-rise test	Increase in temperature ≤ 45 K

Short-time withstand current

Specification	IEC 60947-7-1:2009-04

Air clearances and creepage distances | 1. Insulation coordination

Application	Metal wall 1.0 mm ... 2.5 mm
Specification	IEC 60947-7-1:2009-04
Insulating material group	I
Comparative tracking index (IEC 60112)	CTI 600
Rated insulation voltage (III/3)	400 V
Rated surge voltage (III/3)	6 kV
minimum clearance value - non-homogenous field (III/3)	5.5 mm
minimum creepage distance (III/3)	5.5 mm

Air clearances and creepage distances | 2. Insulation coordination

Application	Metal wall > 2.5 mm ... 4.0 mm
Specification	IEC 60947-7-1:2002-07
Insulating material group	I
Comparative tracking index (IEC 60112)	CTI 600
Rated insulation voltage (III/3)	250 V
Rated surge voltage (III/3)	4 kV
minimum clearance value - non-homogenous field (III/3)	3 mm
minimum creepage distance (III/3)	3.2 mm

Air clearances and creepage distances | 3. Insulation coordination

Application	Plastic panel
Specification	IEC 60947-7-1:2002-07
Insulating material group	I
Comparative tracking index (IEC 60112)	CTI 600
Rated insulation voltage (III/3)	400 V
Rated surge voltage (III/3)	6 kV
minimum clearance value - non-homogenous field (III/3)	5.5 mm
minimum creepage distance (III/3)	5.5 mm

Environmental and real-life conditions

Vibration test

Specification	IEC 60068-2-6:2007-12
Frequency	10 - 150 - 10 Hz
Sweep speed	1 octave/min
Amplitude	0.35 mm (10 Hz ... 60.1 Hz)
Acceleration	5g (60.1 Hz ... 150 Hz)
Test duration per axis	2.5 h
Test directions	X-, Y- and Z-axis

Glow-wire test

Specification	IEC 60695-2-11:2014-02
Temperature	960 °C
Time of exposure	30 s

Ambient conditions

Ambient temperature (operation)	-40 °C ... 100 °C (Depending on the current carrying capacity/derating curve)
Ambient temperature (storage/transport)	-40 °C ... 70 °C
Relative humidity (storage/transport)	30 % ... 70 %
Ambient temperature (assembly)	-5 °C ... 100 °C

Packaging specifications

Type of packaging	packed in cardboard

Drawings

Dimensional drawing

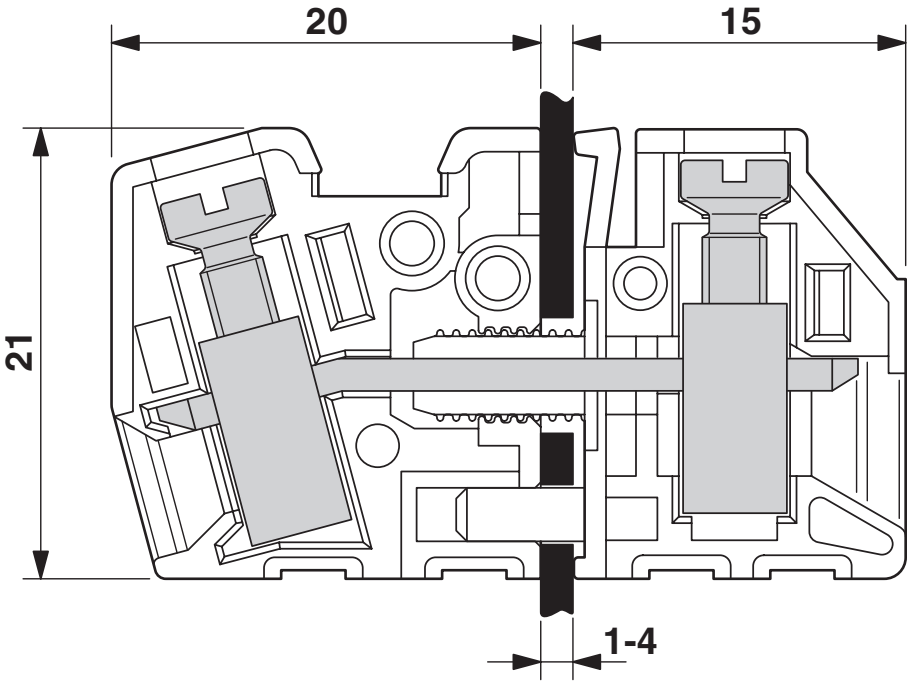

Dimensional drawing

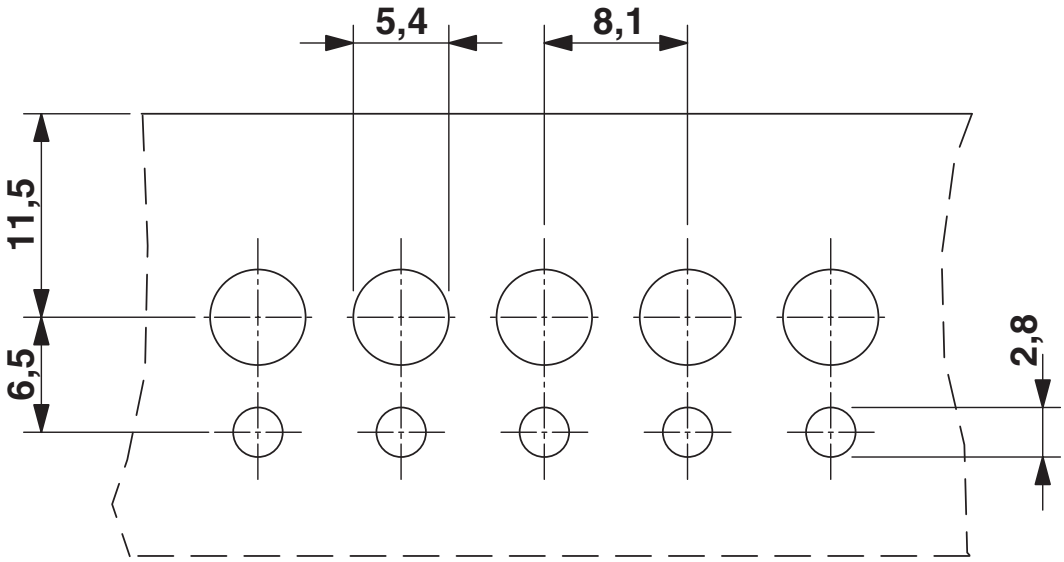

Diagram

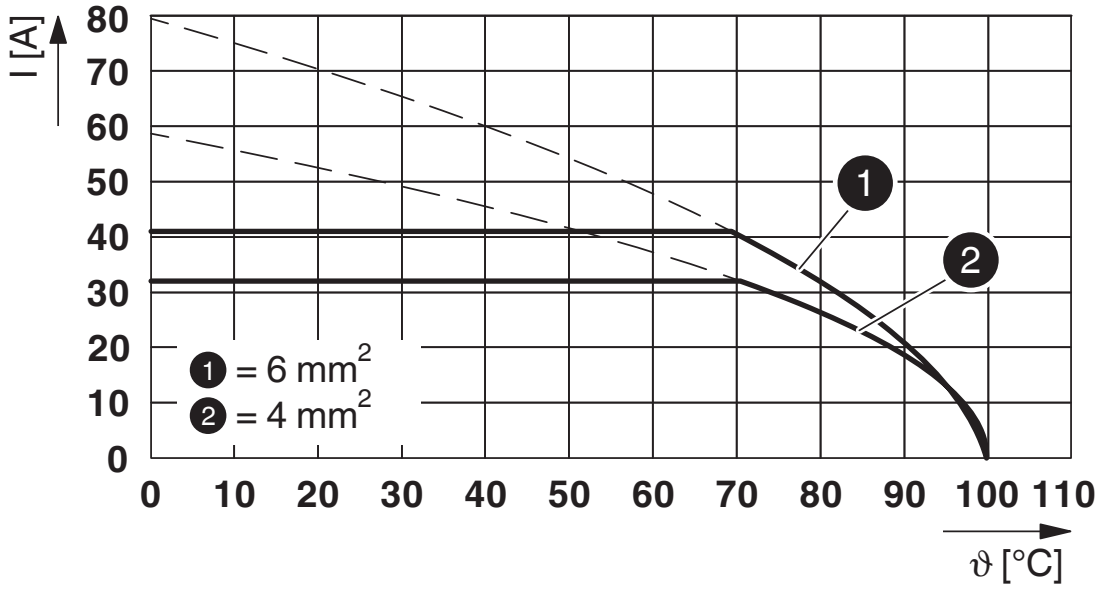

Type: HDFK 4

Approvals

To download certificates, visit the product detail page: https://www.phoenixcontact.com/gb/products/0707086

CSA
Approval ID: 13631

	Nominal voltage U_N	Nominal current I_N	Cross section AWG	Cross section mm^2
	300 V	30 A	22 - 10	-

cULus Recognized
Approval ID: E60425-19870911

	Nominal voltage U_N	Nominal current I_N	Cross section AWG	Cross section mm^2
Use group B				
	300 V	30 A	30 - 10	-
Use group D				
	300 V	10 A	30 - 10	-

KEMA-KEUR
Approval ID: 2169260.01

	Nominal voltage U_N	Nominal current I_N	Cross section AWG	Cross section mm^2
	250 V	32 A	-	- 4

Classifications

ECLASS

ECLASS-13.0	27141134

ETIM

ETIM 9.0	EC001283

UNSPSC

UNSPSC 21.0	39121400

Environmental product compliance

EU RoHS

Fulfills EU RoHS substance requirements	Yes, No exemptions

China RoHS

Environment friendly use period (EFUP)	EFUP-E
	No hazardous substances above the limits

EU REACH SVHC

REACH candidate substance (CAS No.)	No substance above 0.1 wt%

Phoenix Contact 2025 © - all rights reserved
https://www.phoenixcontact.com

PHOENIX CONTACT Ltd
Halesfield 13, Telford
Shropshire, TF7 4PG
01952 681700
info@phoenixcontact.co.uk