E12744

Mounting sleeve with end stop

FIXING/M12/NT/MS/END STOP

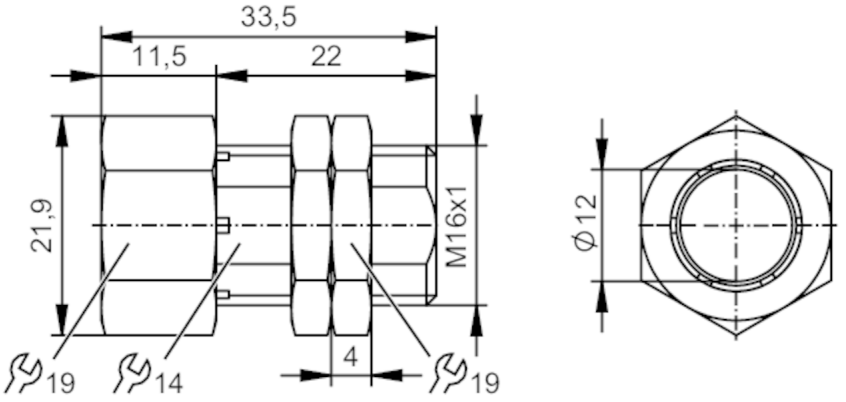
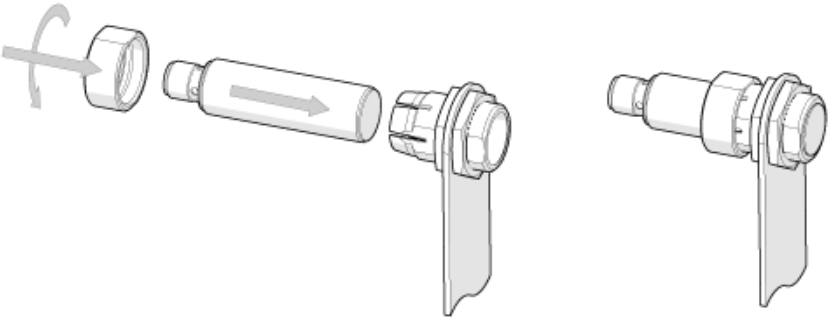
Application		
Design		with end stop
Mechanical data		
Weight	[g]	36.7
Installation instruction		align the sensing face of the sensor to the right (see scale drawing); due to the material brass, negative sensing range reductions may occur (reduced sensing range)
Dimensions	[mm]	M16 x 1 / L = 33.5
Thread designation		M16 x 1
Inside diameter	[mm]	12
Materials		brass white bronze coated; Nuts: brass white bronze coated
Tightening torque	[Nm]	5; (lock nuts: 20)
Accessories		
Items supplied		Nuts: 2
Remarks		
Pack quantity		1 pcs.
Diagrams and graphs		
Installation