OGE100

Through-beam sensor receiver

OGE-DPKG/US

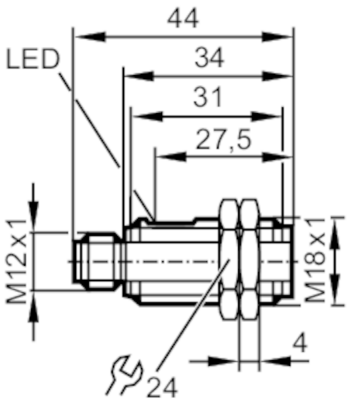

Application		
Function principle		Through-beam sensor
Electrical data		
Operating voltage	[V]	10...30 DC
Current consumption	[mA]	8
Protection class		III
Reverse polarity protection		yes
Type of light		red light
Wave length	[nm]	645
Outputs		
Electrical design		PNP
Output function		dark-on mode
Max. voltage drop switching output DC	[V]	2.5
Permanent current rating of switching output DC	[mA]	200
Switching frequency DC	[Hz]	1000
Short-circuit protection		yes
Overload protection		yes
Detection zone		
Transmitter / receiver		receiver
Range	[m]	< 8
Range adjustable		no
Operating conditions		
Ambient temperature	[°C]	-25...60
Protection		IP 67; (in conjunction with a corresponding connector)
Tests / approvals		
EMC		EN 60947-5-2
MTTF	[years]	1335

OGE100

Through-beam sensor receiver

OGE-DPKG/US

Mechanical data			
Weight	[g]	15	
Housing		threaded type	
Dimensions	[mm]	M18 x 1 / L = 44	
Thread designation		M18 x 1	
Materials		housing: ABS	
Lens material		PMMA	
Displays / operating elements			
Display		switching status	1 x LED, yellow
Accessories			
Accessories (supplied)		lock nuts: 2 x	
Remarks			
Pack quantity		1 pcs.	

Electrical connection

Connector: 1 x M12
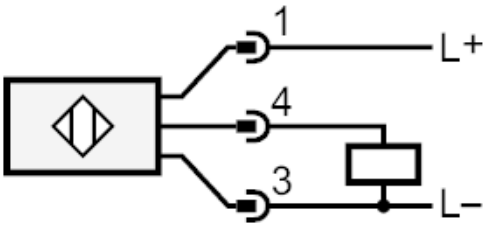
Connection