PV7701

Pressure switch with IO-Link

PV-250MSER14-UFRVG/US/ /

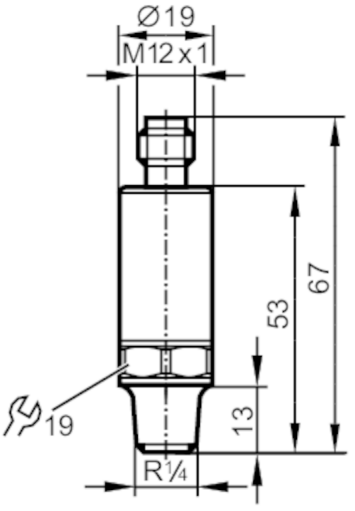

Application		
Measuring element		metallic thin film cell
Application		for industrial applications
Media		liquids and gases
Medium temperature	[°C]	-40...90
Pressure rating	[MPa]	62.5
Note on pressure rating		static
Min. bursting pressure	[MPa]	120
Vacuum resistance	[mbar]	-1000
Type of pressure		relative pressure
Electrical data		
Operating voltage	[V]	18...30 DC
Current consumption	[mA]	< 15
Min. insulation resistance	[MΩ]	100; (500 V DC)
Protection class		III
Reverse polarity protection		yes
Power-on delay time	[s]	< 0.3
Inputs / outputs		
Number of inputs and outputs		Number of digital outputs: 2

PV7701

Pressure switch with IO-Link

PV-250MSER14-UFRVG/US/ /

Outputs				
Total number of outputs		2		
Output signal		switching signal; IO-Link; (configurable)		
Electrical design		PNP/NPN		
Number of digital outputs		2		
Output function		normally open / normally closed; (parameterisable)		
Max. voltage drop switching output DC	[V]	2		
Permanent current rating of switching output DC	[mA]	100		
Switching frequency DC	[Hz]	< 170		
Short-circuit protection		yes		
Type of short-circuit protection		pulsed		
Overload protection		yes		
Measuring/setting range				
Measuring range	[MPa]	0...25		
Set point SP	[MPa]	0.25...25		
Reset point rP	[MPa]	0.13...24.88		
In steps of	[MPa]	0.01		
Factory setting		SP1 = 6.25 MPa	rP1 = 5.75 MPa	ou1 = Hno;
		SP2 = 18.75 MPa	rP2 = 18.25 MPa	ou2 = Hno;
		dS1/dS2 = 0 ms	dr1/dr2 = 0 ms	
		coF = 0 %	P-n = PnP	dAP= 60 ms
Accuracy / deviations				
Switch point accuracy	[% of the span]	< ± 0,5 (nach DIN EN 61298-2)		
Repeatability	[% of the span]	< ± 0,05; (with temperature fluctuations < 10 K)		
Characteristics deviation	[% of the span]	< ± 0,5 (nach DIN EN 61298-2); (incl. drift when overtightened, zero point and span error, non-linearity, hysteresis)		
Linearity deviation	[% of the span]	< ± 0,1 (BFSL) / < ± 0,2 (LS)		
Hysteresis deviation	[% of the span]	< ± 0,2		
Long-term stability	[% of the span]	< ± 0,1; (per 6 months)		
Temperature coefficient zero point	[% of the span / 10 K]	< 0,1 (-25...90 °C) / < 0,2 (-40...-25 °C)		
Temperature coefficient span	[% of the span / 10 K]	< 0,1 (-25...90 °C) / < 0,2 (-40...-25 °C)		
Response times				
Response time	[ms]	< 3		
Software / programming				
Parameter setting options		hysteresis / window; normally open / normally closed; switching logic; switch-on/switch-off delay; Damping		

PV7701

Pressure switch with IO-Link

PV-250MSER14-UFRVG/US/ /

Interfaces		
Communication interface		IO-Link
Transmission type		COM2 (38,4 kBaud)
IO-Link revision		1.1
SDCI standard		IEC 61131-9
IO-Link device ID		781 d / 00 03 0d h
Profiles		Smart Sensor: Process Data Variable; Device Identification, Device Diagnosis
SIO mode		yes
Required master port type		A
Process data analogue		2
Process data binary		2
Min. process cycle time	[ms]	5

Operating conditions		
Ambient temperature	[°C]	-40...90
Storage temperature	[°C]	-40...100
Protection		IP 67; IP 69K

Tests / approvals			
EMC		DIN EN 61326-1	
Shock resistance		DIN EN 60068-2-27	500 g (1 ms)
Vibration resistance		DIN EN 60068-2-6	20 g (10...2000 Hz)
MTTF	[years]	667.77	
Pressure Equipment Directive		Sound Engineering Practice; can be used for group 2 fluids; group 1 fluids on request	

Mechanical data		
Weight	[g]	64.2
Materials		1.4542 (17-4 PH / 630); stainless steel (1.4404 / 316L); PEI
Materials (wetted parts)		stainless steel (1.4305 / 303); 1.4542 (17-4 PH / 630)
Min. pressure cycles		60 million; (at 1.2 times nominal pressure)
Tightening torque	[Nm]	50; (recommended tightening torque; depends on lubrication, seal and pressure rating)
Process connection		threaded connection R 1/4 external thread internal threadM5
Restrictor element integrated		yes

Remarks	
Remarks	BFSL = Best Fit Straight Line
	LS = limit value setting
Pack quantity	1 pcs.

Electrical connection

Connector: 1 x M12

PV7701

Pressure switch with IO-Link

PV-250MSER14-UFRVG/US/ /

Connection

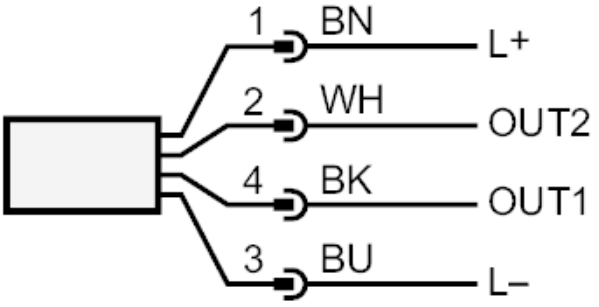

OUT1	switching output
	IO-Link
OUT2	switching output
	colours to DIN EN 60947-5-2
	Core colours :
BK =	black
BN =	brown
BU =	blue
WH =	white