Dimensions

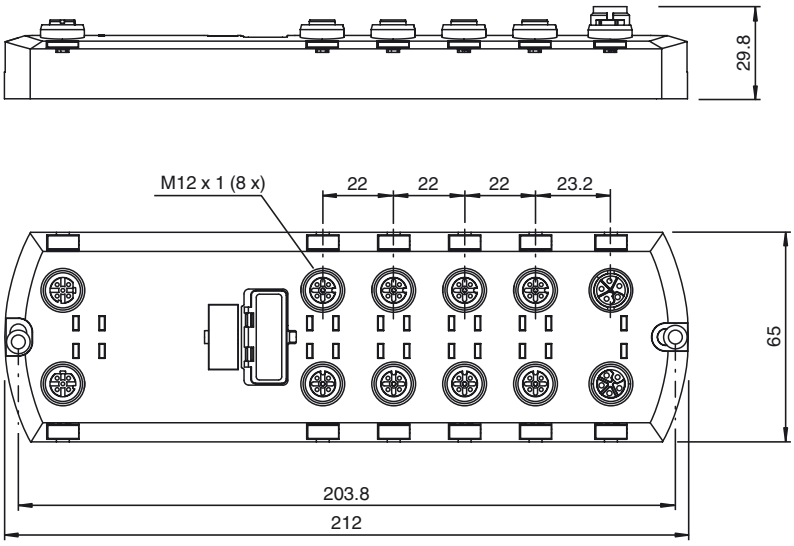

Model number

ICE3-8IOL-G65L-V1D

PROFINET IO IO-Link master with 8 inputs/outputs

Features

- Web-based configuration of module and IO-Link devices
- Integrated IODD storage for more than 100 IODDs
- Downloadable module configuration
- M12 L-coded power connector
- PROFINET IO, Modbus/TCP and OPC UA Support

Function

The module is a PROFINET IO fieldbus module with 8 type A IO-Link master ports according to IO-Link standard V1.1.
The fieldbus module serves as an interface between the controller of a PROFINET IO fieldbus system and IO-Link devices in the field level. The integrated web server and IODD interpreter enabling complete configuration of the fieldbus module and attached IO-Link devices without the need for special software tools. Information regarding the status of the module is also displayed and network parameters such as the IP address and subnet mask can be configured. The module is capable of storing all configuration enabling stand-alone usage without a higher-level PLC. MutliLink simultaneously provides data access via different communication protocols like PROFINET IO, Modbus/TCP and OPC UA to multiple controllers. An L-coded M12 connector plug used for supplying power enables a current rating of up to 2 x 16 A.
The inputs and outputs are equipped with A-coded M12 connector plugs. Connection to the fieldbus is achieved using a D-coded M12 connector plug.
Status information for each channel is displayed via LEDs as a diagnostic function.

Electrical connection

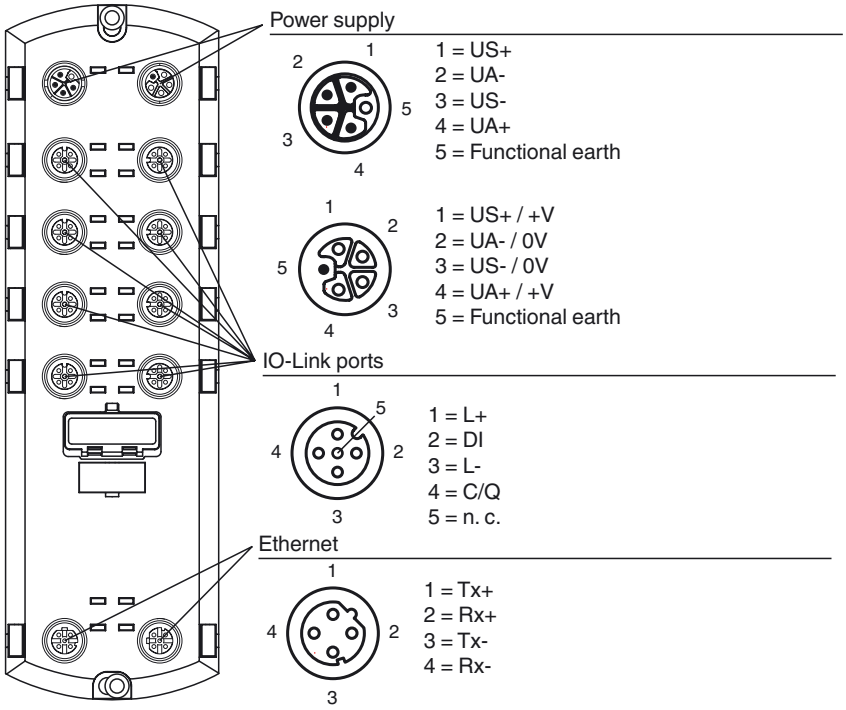

Release date: 2019-10-14 15:31 Date of issue: 2019-11-20 70104876_eng.xml

Indicating / Operating means

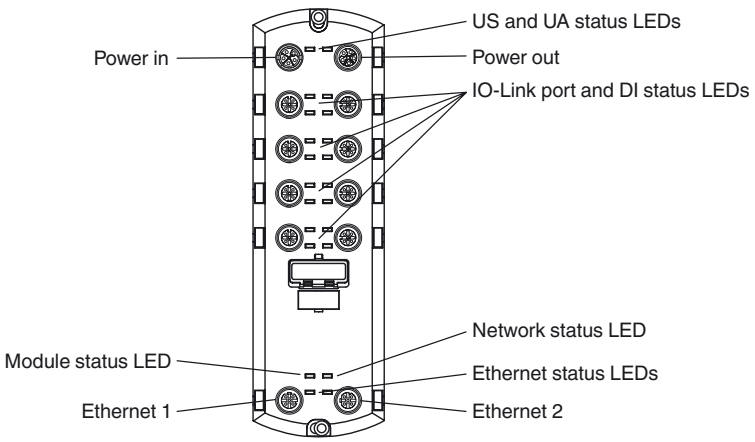

Technical data

General specifications		
UL File Number		E360395
Indicators/operating means		
LED indication		see manual
Rotary switch		Setting the IP address
Electrical specifications		
Rated operating voltage	U_e	20 ... 30 V DC
Nominal voltage		24 V DC
Current consumption		typ. 120 mA
Current loading capacity		Max. 2 x 16 A per module (Loop-through current via L-coded power supply) Total current: max. 6.7 A per module
Galvanic isolation		between US and UA
Interface 1		
Interface type		Industrial Ethernet
Physical		M12, D-coded
Protocol		PROFINET IO + Modbus TCP + OPC UA
Transfer rate		10/100 Mbps
Inputs/Outputs		
Number/Type		8 x IO-Link Class A (X1 – X8) Configurable as: Max. 8 IO-Link and 8 digital outputs Max. 16 digital inputs Max. 8 digital inputs and 8 digital outputs short-circuit protected
Sensor supply		Port 1: max. 1.6 A Via L+ (pin 1) Port 3: max. 1 A via L+ (pin 1) Ports 2 and 4 – 8: max. 500 mA per port via L+ (pin 1)
Output rated operating current	I_e	max. 200 mA Per port via C/Q (pin 4)
Directive conformity		
Electromagnetic compatibility		
Directive 2014/30/EU		EN 61000-6-2 , EN 61000-6-4
Standard conformity		
Degree of protection		EN 60529
Fieldbus standard		Type 1 according to IEC 61131-2, EN 61131-9
Electrical safety		CSA C22.2 No. 61010-1-12 UL 61010-1, IEC 61010-2-201
Emitted interference		EN 61000-6-4, FCC Part 15 Subpart B, ICES-001, AS/NZS CISPR 11
Noise immunity		EN 61000-6-2 , EN 61131-2 , EN 61131-9
Shock resistance		EN 60068-2-27
Ambient conditions		
Ambient temperature		-25 ... 60 °C (-13 ... 140 °F)
Storage temperature		-40 ... 85 °C (-40 ... 185 °F)
Relative humidity		max. 95 %
Altitude		0 ... 2000 m
Shock and impact resistance		15g, 11ms, half-sine
Mechanical specifications		
Degree of protection		IP67
Connection		Power Supply M12, L-coded Fieldbus M12, D-coded Inputs/Outputs M12, A-coded
Material		
Housing		Molded Polyamide 66

Accessories

V15L-G-5M-PUR-U
Single-ended female cordset, M12, L-coded, 5-pin, PUR cable

V15L-G-2M-PUR-U-V15L-G
Cordset, M12 to M12, L-coded, 5-pin, PUR cable

V1SD-G-2M-PUR-ABG-V45-G
Connection cable, M12 to RJ-45, PUR cable 4-pin, CAT5e

V1SD-G-2M-PUR-ABG-V1SD-G
Ethernet bus cable, M12 to M12, PUR cable 4-pin, CAT5e

V1SD-G-ABG-PG9
Cable connector, M12, 4-pin, D-coded, shielded, non pre-wired

V1-G-BK1M-PUR-A-T-V1-G
Y connecting cable, M12 to 2xM12, 4-pin, PUR cable

VAZ-V1-B3
Blind plug for M12 sockets

V1S-T-V1
Y-splitter, M12 connector on M12 socket/socket

V15L-G-BK
Single-ended female cordset, M12, L-coded, field attachable

MH V1-SCREWDRIVER
torque screwdriver (0.6 Nm)

MH V1-BIT M12
plug-in cap M12

ICA-10DI6DO-G60A-IO
I/O hub with IO-Link interface for 10 digital inputs and 6 digital outputs

ICA-16DIO-G60AL-IO
I/O hub with IO-Link interface for 16 digital inputs/outputs

Release date: 2019-10-14 15:31 Date of issue: 2019-11-20 70104876_eng.xml

Mass	454 g
Tightening torque, fastening screws	8 Nm
Tightening torque, cable gland	≤ 0.5 Nm

Release date: 2019-10-14 15:31 Date of issue: 2019-11-20 70104876_eng.xml