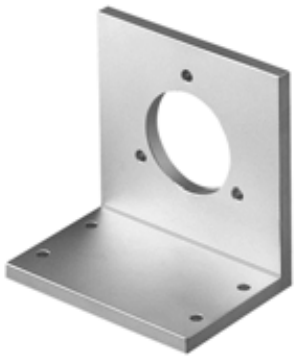

## Dimensions

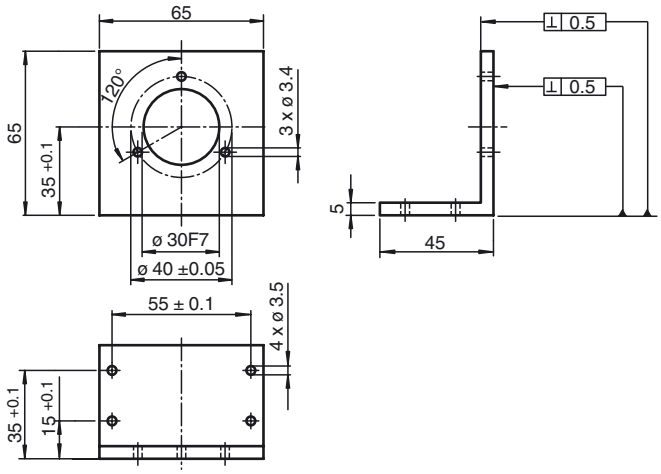


## Technical data

## Model Number

**9250**

Release date: 2019-07-12 14:53 Date of issue: 2019-07-12 045040_eng.xml