Model Number

CBN15-F64-A0

Features

- **15 mm non-flush**
- **Flat housing**
- **Switching distance adjustable between 2 mm ... 15 mm**

Accessories

MH-F64
Mounting plate

Technical Data

General specifications		
Switching function		complementary
Output type		NPN
Rated operating distance	s_n	15 mm
Installation		non-flush
Output polarity		DC
Assured operating distance	s_a	0 ... 10.8 mm
Actual operating distance	s_r	13.5 ... 16.5 mm
Output type		4-wire
Nominal ratings		
Installation conditions		
B		15 mm
C		30 mm
F		45 mm / 60 mm
Operating voltage	U_B	10 ... 30 V DC
Switching frequency	f	0 ... 100 Hz
Hysteresis	H	1 ... 10 typ. 5 %
Reverse polarity protection		reverse polarity protected
Short-circuit protection		pulsing $I_{max} \leq 500$ mA
Voltage drop	U_d	≤ 2 V
Repeat accuracy	R	≤ 1.5 mm
Design data		
Operating current	I_L	0 ... 100 mA
Off-state current	I_r	0 ... 50 µA typ. 5 µA
No-load supply current	I_0	≤ 15 mA
Switching state indicator		LED, yellow
Functional safety related parameters		
$MTTF_d$		941 a
Mission Time (T_M)		20 a
Diagnostic Coverage (DC)		0 %
Indicators/operating means		
Potentiometer		sensitivity adjustment
Ambient conditions		
Ambient temperature		-25 ... 70 °C (-13 ... 158 °F)
Storage temperature		-40 ... 85 °C (-40 ... 185 °F)
Mechanical specifications		
Connection type		cable PUR , L = 2 m
Core cross-section		0.34 mm^2
Housing material		PBT
Sensing face		PBT
Degree of protection		IP67
Tightening torque, housing screws		≤ 2 Nm
Note		Screw-in depth of housing screws, max. 8 mm
Compliance with standards and directives		
Standard conformity		
Standards		EN 60947-5-2:2007 EN 60947-5-2/A1:2012 IEC 60947-5-2:2007 IEC 60947-5-2 AMD 1:2012
Approvals and certificates		
UL approval		cULus Listed, General Purpose
CCC approval		CCC approval / marking not required for products rated ≤36 V

Dimensions

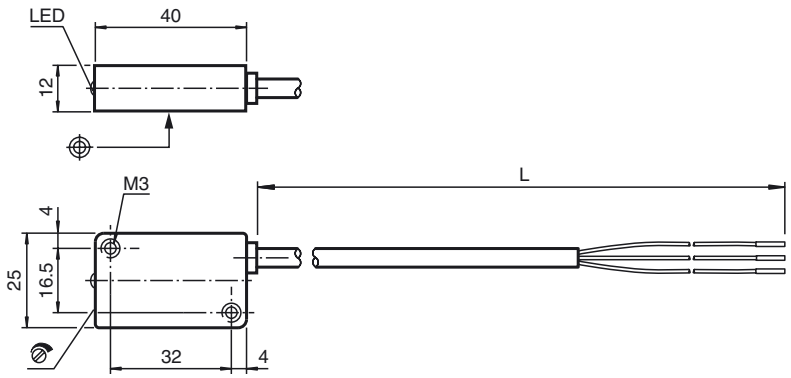

Release date: 2019-07-09 13:05 Date of issue: 2019-07-09 263264_eng.xml

Electrical Connection

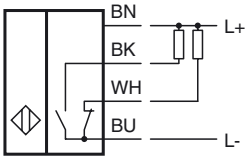

Installation Conditions

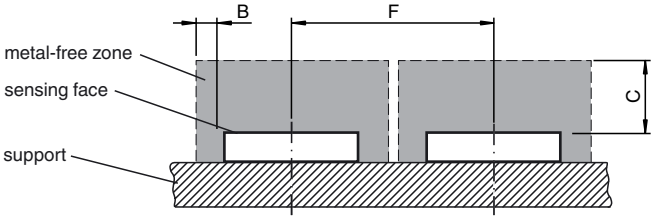

Release date: 2019-07-09 13:05 Date of issue: 2019-07-09 263264_eng.xml