Model Number

OMH-VL18

Mounting Bracket with swivel nut

Features

- Simple and fast mounting

Mounting bracket for sensors of VL18 series

Dimensions

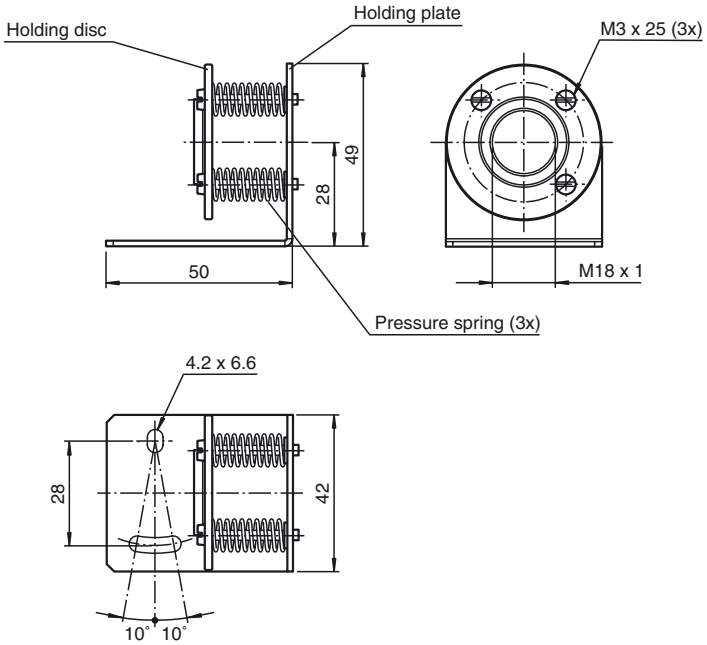

Technical data

General specifications	
Inside diameter	18 mm
Mechanical specifications	
Material	Metal /high-grade steel
Mass	approx. 70 g
Dimensions	42 mm x 49 mm x 30 mm
Suitable series	
Series	VL18

Release date: 2019-05-22 15:46 Date of issue: 2019-05-22 125716_eng.xml