Model Number

V19-W-BK2M-PUR-U-V19-G

Connection cable, M12 to M12, PUR cable 8-pin

Features

- UL Recognized Component
- Knurled nut suitable for tool assembly
- Immunity to vibration, with mechanical latching
- Gold-plated and machined contacts
- Flame resistant cable
- Resistant to microbes and hydrolysis
- Halogen-free
- Degree of protection IP67 / IP68 / IP69K

Dimensions

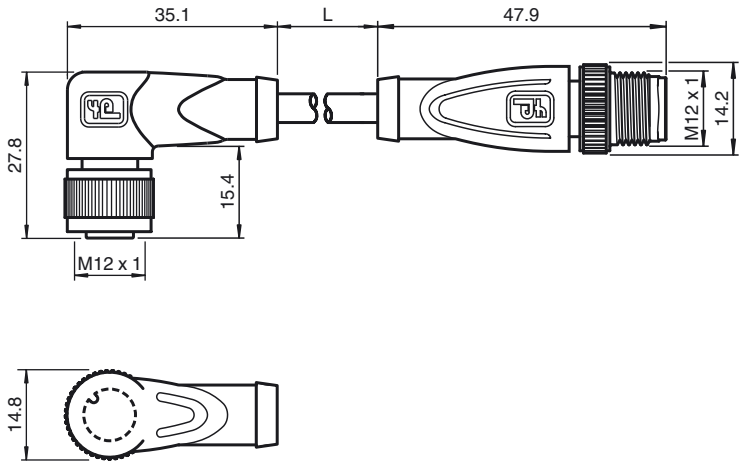

Technical data

General specifications		
Number of pins		8
UL File Number		E231213
Electrical specifications		
Operating voltage	U_B	max. 30 V AC/DC
Test voltage		> 1500 V_{eff} AC
Operating current	I_B	max. 2 A
Ambient conditions		
Ambient temperature		-40 ... 90 °C (-40 ... 194 °F) cable, flexing: -20 ... 80 °C (-4 ... 176 °F) cable, fixed: -40 ... 80 °C (-40 ... 176 °F)
Pollution degree		3
Mechanical specifications		
Contact elements		spring-loaded contact socket
Pin diameter		1 mm
Degree of protection		IP67 / IP68 / IP69k
Material		
Contacts		CuSn / Au
Contact surface		Au
Body		TPU, green
Cable		PUR
Slotted nut		Diecast zinc
Core insolation		PP
Cable		fine-strand, flexible
Sheath diameter		Ø 6 mm
Bending radius		> 10 x cable diameter, moving > 8 x cable diameter, fixed
Color		black
Cores		8 x 0.25 mm^2
Conductor construction		14 x 0.15 mm Ø
Length	L	2 m
Flammability		
Contact carrier		94 HB
Housing		94 V-2
Approvals and certificates		
UL approval		cURus AWM 20549 AWM I/II A/B 80°C 300V FT2 (cable)

Electrical connection

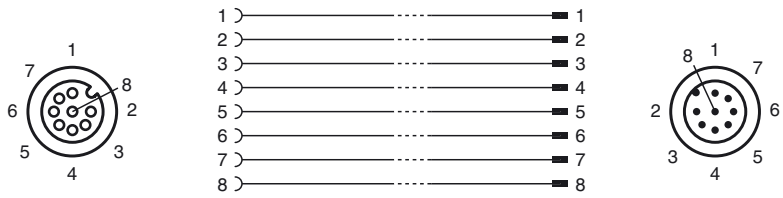

Release date: 2017-06-21 09:30 Date of issue: 2017-06-21 240776-0030_eng.xml