## Model Number

**NBB20-L2M-A0-V1-M**

## Features

- **Sensor head bidirectional and rotatable**
- **20 mm flush**
- **E1-Type approval**
- **Extended temperature range - 40 ... +85 °C**
- **4 LEDs indicator for 360° visibility**

## Accessories

**V1-G**
Female connector, M12, 4-pin, field attachable
**V1-W**
Female connector, M12, 4-pin, field attachable
**V1-G-2M-PUR**
Female cordset, M12, 4-pin, PUR cable
**V1-W-2M-PUR**
Female cordset, M12, 4-pin, PUR cable
**MHW 01**
Modular mounting bracket
**V1-M20-80**
Receptacles, M12/M20; plastic version

## Technical Data

| | | | |
|---|---|---|---|
| **General specifications** | | | |
| Switching element function | | NPN | NO/NC |
| Rated operating distance | $s_n$ | 20 mm | |
| Installation | | flush | |
| Output polarity | | DC | |
| Assured operating distance | $s_a$ | 0 ... 16.2 mm | |
| Reduction factor $r_{Al}$ | | 0.34 | |
| Reduction factor $r_{Cu}$ | | 0.32 | |
| Reduction factor $r_{304}$ | | 0.77 | |
| Reduction factor $r_{St37}$ | | 1 | |
| Reduction factor $r_{Brass}$ | | 0.43 | |
| **Nominal ratings** | | | |
| Operating voltage | $U_B$ | 10 ... 60 V DC | |
| Switching frequency | f | 0 ... 200 Hz | |
| Hysteresis | H | typ. 5 % | |
| Reverse polarity protection | | reverse polarity protected | |
| Short-circuit protection | | pulsing | |
| Voltage drop | $U_d$ | ≤ 2 V | |
| Operating current | $I_L$ | 0 ... 200 mA | |
| Off-state current | $I_r$ | 0 ... 0.5 mA | |
| No-load supply current | $I_0$ | ≤ 20 mA | |
| Operating voltage indicator | | LED, green | |
| Switching state indicator | | LED, yellow | |
| **Functional safety related parameters** | | | |
| $MTTF_d$ | | 670 a | |
| Mission Time ($T_M$) | | 20 a | |
| Diagnostic Coverage (DC) | | 0 % | |
| **Ambient conditions** | | | |
| Ambient temperature | | -40 ... 85 °C (-40 ... 185 °F) | |
| **Mechanical specifications** | | | |
| Connection type | | Connector M12 x 1 , 4-pin | |
| Housing material | | PA-GF35<br>metal base powder coated<br>metal mounting flang powder coated. | |
| Sensing face | | PA-GF35 | |
| Degree of protection | | IP69K | |
| Mass | | 130 g | |
| **Compliance with standards and directives** | | | |
| Standard conformity | | | |
| Standards | | EN 60947-5-2:2007<br>IEC 60947-5-2:2007 | |
| **Approvals and certificates** | | | |
| UL approval | | cULus Listed, General Purpose | |
| CSA approval | | cCSAus Listed, General Purpose | |
| CCC approval | | Certified by China Compulsory Certification (CCC) | |
| E1 Type approval | | 10R-04 | |

## Dimensions

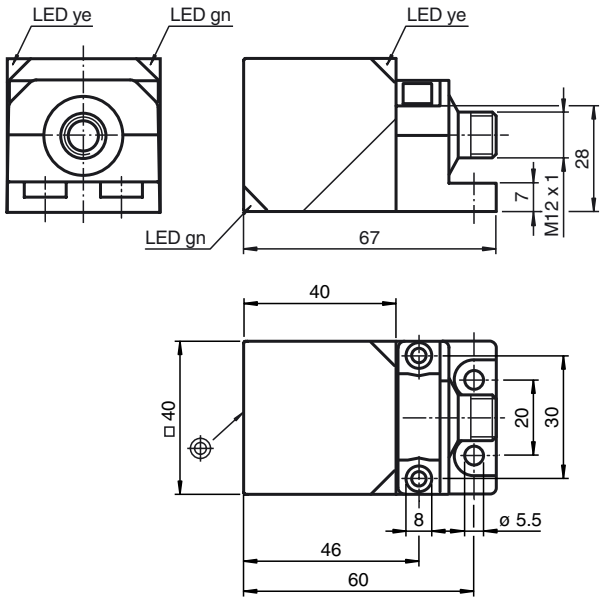


Release date: 2015-02-24 08:18 Date of issue: 2015-02-24 237702_eng.xml

## Electrical Connection

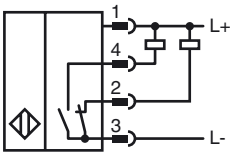


## Installation Hint

Emitted interference and interference immunity in accordance with motor vehicle directive 2006/28/EG (e1 Type approval)
Interference immunity in accordance with DIN ISO 11452-2: 100 V/m
Frequency band 20 MHz up to 2 GHz

Mains-borne interference in accordance with ISO

| 7637-2: Pulse | 1 | 2a | 2b | 3 a | 3b | 4 | 5 |
|---|---|---|---|---|---|---|---|
| Severity level | III | III | III | III | III | III | IV |
| Failure criterion | C | A | C | A | A | A | C |

| | | |
|---|---|---|
| EN 61000-4-2: | CD: 8 kV / | AD: 15 kV |
| Severity level | IV | IV |
| EN 61000-4-3: | 30 V/m (80...2500 MHz) | |
| Severity level | IV | |
| EN 61000-4-4: | 2 kV | |
| Severity level | III | |
| EN 61000-4-6: | 10 V (0.01...80 MHz) | |
| Severity level | III | |
| EN 55011: | Class A | |

Release date: 2015-02-24 08:18 Date of issue: 2015-02-24 237702_eng.xml


Refer to “General Notes Relating to Pepperl+Fuchs Product Information”.
Pepperl+Fuchs Group www.pepperl-fuchs.com
USA: +1 330 486 0001 fa-info@us.pepperl-fuchs.com
Germany: +49 621 776 4411 fa-info@de.pepperl-fuchs.com
Singapore: +65 6779 9091 fa-info@sg.pepperl-fuchs.com
PEPPERL+FUCHS SENSING YOUR NEEDS