ONLINE DATA SHEET
www.mysick.com

Photoelectric sensors
V12-2, Photoelectric proximity sensor, energetic

VT12T-2P132

SICK
Sensor Intelligence.

Photoelectric sensors
V12-2, Photoelectric proximity sensor, energetic

Model Name > VT12T-2P132
Part No. > 6026215

Illustration may differ

At a glance

- Sensing distance up to 115 mm or 340 mm (90% remission)
- 2 teach-in modes: Standard teach mode for basic applications, precise teach mode with small hysteresis for special applications
- Adjustable light or dark switching as complementary outputs
- PNP or NPN output available
- Complements inductive sensor portfolio
- M12 housing
- 4-pin M12 connector or 2 m cable

Your benefits

- Standard M12 miniature housing saves installation space on the machine
- Simple design and time-saving installation due to a standard M12 housing
- Operating reserve display simplifies commissioning and saves maintenance time
- Cost-effective solution due to simple mounting, standardized connection technology and broad application use
- Fast response times ensure reliable detection of objects at high speeds, increasing machine throughput
- Tough metal housing provides a long service life, reducing maintenance time and costs

Features

Sensor/detection principle:	Photoelectric proximity sensor, energetic
Housing design (light emission):	Cylindrical, straight
Housing length:	54.5 mm
Thread diameter (housing):	M12 x 1
Sensing range max.:	0 mm ... 340 mm [1]
Sensing range:	2 mm ... 300 mm
Type of light:	Infrared light
Light source:	LED [2]
Light spot (distance):	28 mm (300 mm)
Wave length:	880 nm
Sensitivity adjustment:	Manual, via teach-in button electronic, via control input C (0 V)
Angle of dispersion:	5.3 °

[1] Object with 90 % reflectance (referred to standard white DIN 5033) [2] Average service life of 100,000 h at T_A = +25 °C

© SICK AG. Subject to change without notice.

Mechanics/electronics

Supply voltage:	10 V DC ... 30 [1]
Ripple:	≤ 10 % [2]
Power consumption:	20 [3]
Output type:	PNP, Light/dark-switching, Selectable via control input C
Output current Imax.:	100 [4]
Response time:	≤ 1.25 ms [5]
Switching frequency:	400 [6]
Connection type:	Cable, 4-wire, 2 m [7]
Cable material:	PVC
Conductor cross-section:	0.14 mm²
Cable diameter:	3.75 mm
Circuit protection::::	A, B, C, D [8] [9] [10] [11]
Protection class:	III
Weight:	54 g
Housing material:	Nickel-plated brass/PA
Optics material:	PMMA
Enclosure rating:	IP 67
Ambient operating temperature:	-25 ... 70 °C
Ambient storage temperature:	-25 ... 70 °C

[1] Limit values [2] May not exceed or fall short of V_S tolerances [3] [4] Without load [5] Signal transit time with resistive load [6] With light/dark ratio 1:1 [7] Do not bend below 0 °C [8] A = V_S connections reverse-polarity protected [9] B = inputs and output reverse-polarity protected [10] C = interference suppression [11] D = outputs overcurrent and short-circuit protected

© SICK AG. Subject to change without notice.

Dimensional drawing

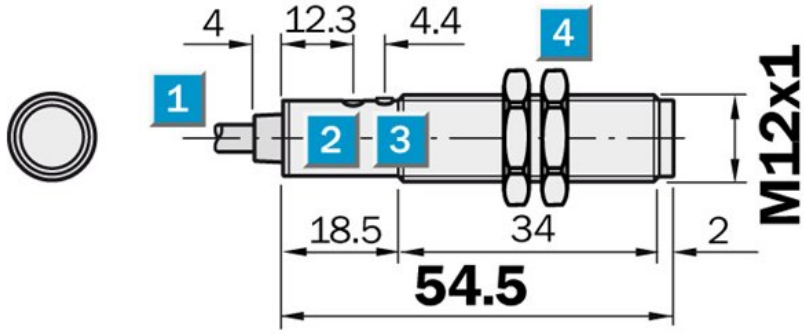

|1| Cable or connector M12, 4-pin
|2| Sensitivity setting; single teach button
|3| Yellow LED indicator:- lights
continuously:reception signal> reserve factor 2- b
links: Reception signal< reserve factor 2 but > switching
|4| fastening nuts (2 x); width across 17, metal

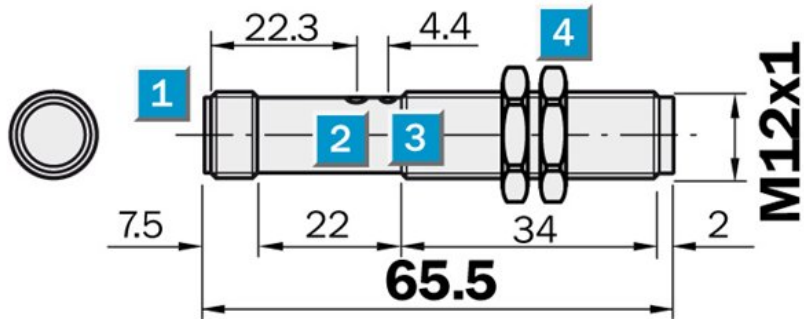

Adjustments possible

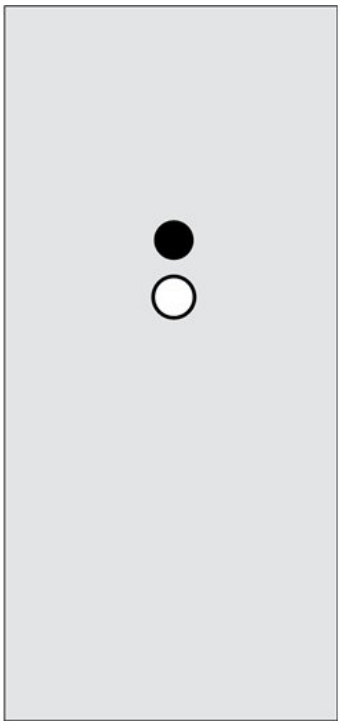

© SICK AG. Subject to change without notice.

Connection diagram

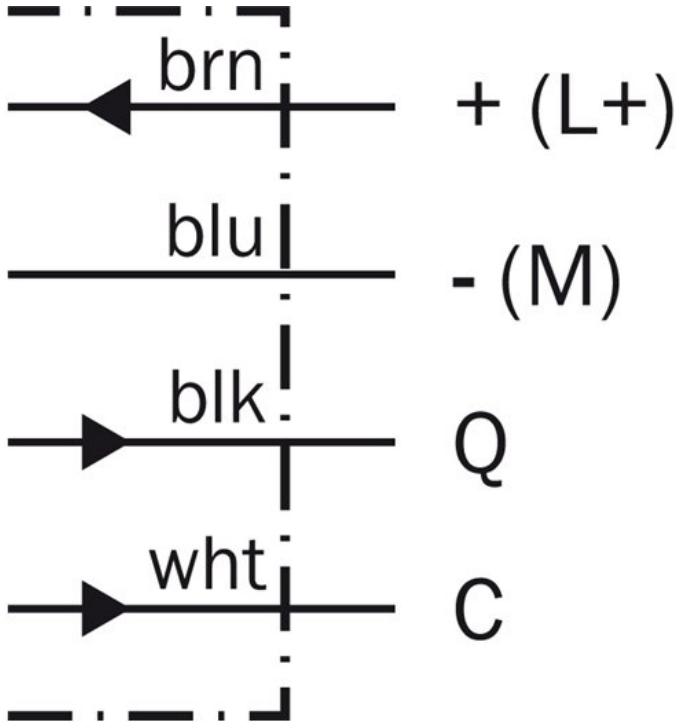

Characteristic curve

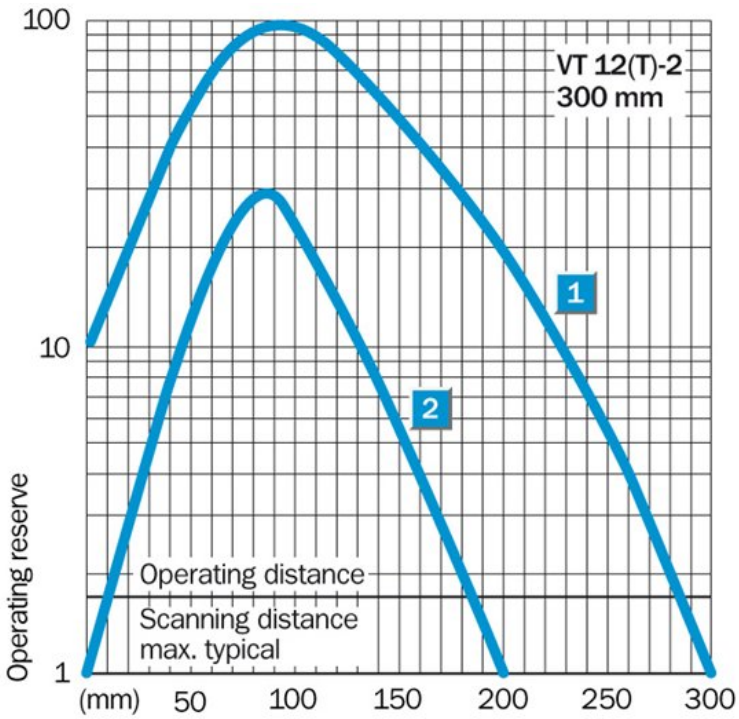

© SICK AG. Subject to change without notice.

Connection type

Sensing range diagram

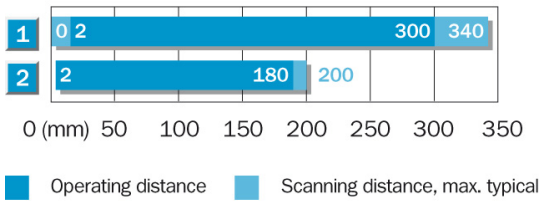

1	Scanning distance on white, 90 % remission
2	Scanning distance on grey, 18 % remission

© SICK AG. Subject to change without notice.

· USmod 4c int40

Australia
Phone +61 3 9457 0600
1800 334 802 – tollfree
E-Mail sales@sick.com.au

Belgium/Luxembourg
Phone +32 (0)2 466 55 66
E-Mail info@sick.be

Brasil
Phone +55 11 3215-4900
E-Mail sac@sick.com.br

Canada
Phone +1 905 771 14 44
E-Mail information@sick.com

Ceská Republika
Phone +420 2 57 91 18 50
E-Mail sick@sick.cz

China
Phone +86 4000 121 000
E-Mail info.china@sick.net.cn
Phone +852-2153 6300
E-Mail ghk@sick.com.hk

Danmark
Phone +45 45 82 64 00
E-Mail sick@sick.dk

Deutschland
Phone +49 211 5301-301
E-Mail kundenservice@sick.de

España
Phone +34 93 480 31 00
E-Mail info@sick.es

France
Phone +33 1 64 62 35 00
E-Mail info@sick.fr

Great Britain
Phone +44 (0)1727 831121
E-Mail info@sick.co.uk

India
Phone +91–22–4033 8333
E-Mail info@sick-india.com

Israel
Phone +972-4-6801000
E-Mail info@sick-sensors.com

Italia
Phone +39 02 27 43 41
E-Mail info@sick.it

Japan
Phone +81 (0)3 3358 1341
E-Mail support@sick.jp

Magyarország
Phone +36 1 371 2680
E-Mail office@sick.hu

Nederlands
Phone +31 (0)30 229 25 44
E-Mail info@sick.nl

Norge
Phone +47 67 81 50 00
E-Mail austefjord@sick.no

Österreich
Phone +43 (0)22 36 62 28 8-0
E-Mail office@sick.at

Polska
Phone +48 22 837 40 50
E-Mail info@sick.pl

România
Phone +40 356 171 120
E-Mail office@sick.ro

Russia
Phone +7-495-775-05-30
E-Mail info@sick.ru

Schweiz
Phone +41 41 619 29 39
E-Mail contact@sick.ch

Singapore
Phone +65 6744 3732
E-Mail admin@sicksgp.com.sg

Slovenija
Phone +386 (0)1-47 69 990
E-Mail office@sick.si

South Africa
Phone +27 11 472 3733
E-Mail info@sickautomation.co.za

South Korea
Phone +82 2 786 6321/4
E-Mail info@sickkorea.net

Suomi
Phone +358-9-25 15 800
E-Mail sick@sick.fi

Sverige
Phone +46 10 110 10 00
E-Mail info@sick.se

Taiwan
Phone +886-2-2375-6288
E-Mail sales@sick.com.tw

Türkiye
Phone +90 (216) 528 50 00
E-Mail info@sick.com.tr

United Arab Emirates
Phone +971 (0) 4 8865 878
E-Mail info@sick.ae

USA/México
Phone +1(952) 941-6780
1 800-325-7425 – tollfree
E-Mail info@sickusa.com

More representatives and agencies
at **www.sick.com**