Inductive sensor for the food industry BI4U-EM12WDTC-AP6X

Industrial Automation

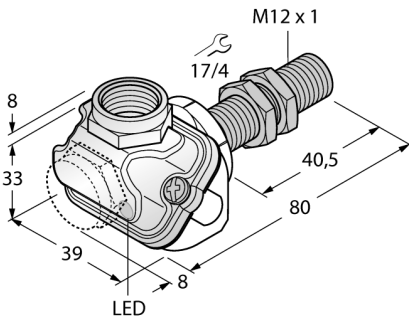

- **Threaded barrel, M12 x 1**
- **Stainless steel, 1.4404**
- **Front cap made of liquid crystal polymer Vectra**
- **Factor 1 for all metals**
- **Resistant to magnetic fields**
- **For temperatures of -40 °C … +100 °C**
- **High protection class IP69K, for harsh environments**
- **Special double-lip seal**
- **Protection against all common acid and alkaline cleaning agents**
- **For the food industry**
- **3-wire DC, 10…30 VDC**
- **NO contact, PNP output**
- **Terminal chamber**

Type code	BI4U-EM12WDTC-AP6X
Ident no.	1634760
Rated operating distance Sn	4 mm
Mounting condition	flush
Assured sensing range	≤ (0,81 x Sn) mm
Repeatability	≤ 2 % of full scale
Temperature drift	10 %
	≤ ± 20 %, ≤ -25 °C , ≥ +70 °C
Hysteresis	3…15 %
Ambient temperature	-40…+100 °C
Operating voltage	10…30VDC
Residual ripple	≤ 10 % U_{ss}
DC rated operational current	≤ 200 mA
No-load current I_0	≤ 15 mA
Residual current	≤ 0.1 mA
Rated insulation voltage	≤ 0.5 kV
Short-circuit protection	yes/ cyclic
Voltage drop at I_e	≤ 1.8 V
Wire breakage / Reverse polarity protection	yes/ complete
Output function	3-wire, NO contact, PNP
Protection class	⧈
Switching frequency	2 kHz
Design	threaded barrel, M12 x 1
Dimensions	80 mm
Housing material	stainless steel, V4A (1.4404)
Terminal chamber cover material	plastic, Ultem
Terminal chamber housing material	plastic, LCP-GF30
Material active area	Plastic, LCP
Admissible pressure on front cap	≤ 20 bar
Max. tightening torque housing nut	10 Nm
Connection	terminal chamber, Removable cage clamp terminals
	suited for M16 x 1.5 cable glands
Clamping ability	≤ 1.5 mm^2
Vibration resistance	55 Hz (1 mm)
Shock resistance	30 g (11 ms)
Protection class	IP68 / IP69K
MTTF	874 years acc. to SN 29500 (Ed. 99) 40 °C
Switching state	LED yellow

Wiring diagram

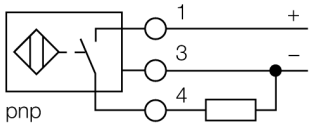

Functional principle

uprox®+ sensors from TURCK are the perfect solution for dairies, breweries, industrial bakeries, frozen food, packaging and filling applications. They are absolutely tight and resistant to cleaning agents and disinfectants and well exceed the rerquirements of the protection classes IP68 and IP69K thanks to the LCP front cap and the stainless steel housing.

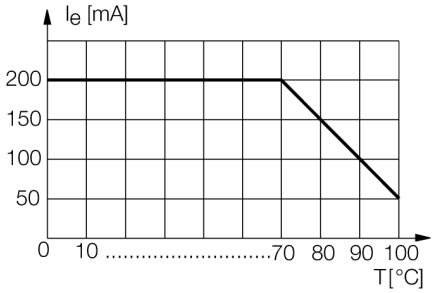

Edition • 2014-04-11T22:54:22+02:00

Hans Turck GmbH & Co.KG • D-45472 Mülheim an der Ruhr • Witzlebenstraße 7 • Tel. 0208 4952-0 • Fax 0208 4952-264 • more@turck.com • www.turck.com

Distance D	24 mm
Distance W	12 mm
Distance T	36 mm
Distance S	18 mm
Distance G	24 mm

Diameter of the active area B	Ø 12 mm

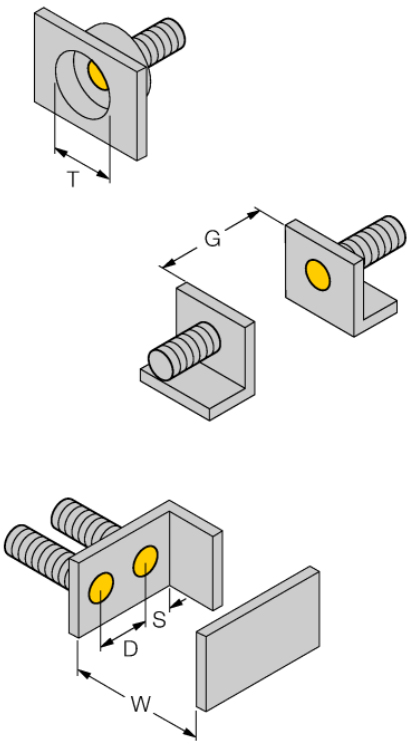

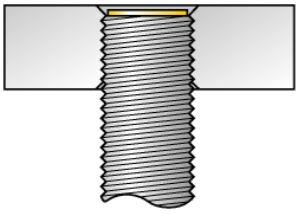

Flush and recessed mounting of all uprox®+ threaded barrel sensors. Safe operation is ensured if the sensor is screwed in by half a turn.

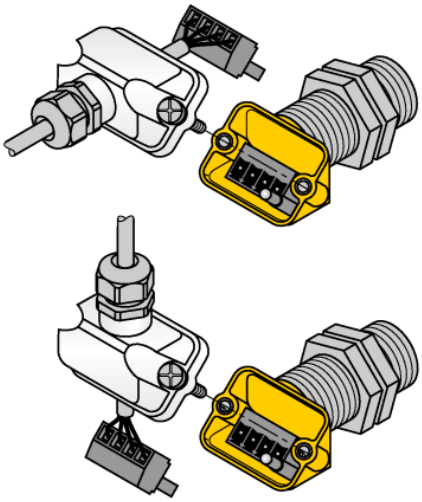

The innovative terminal chamber concept enables easy and simple connection of the sensor. Straight as well as angeled cable outlets are available and the removable terminal strip guarantees easy wiring.

Edition • 2014-04-11T22:54:22+02:00

Accessories

Type code	Ident no.	Description	Dimension drawing
PN-M12	6905309	Impact protection nut for M12x1 threaded barrel devices; material: Stainless steel A2 1.4305 (AISI 303)	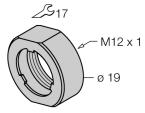
M16X1,5 PVDF CABLE GLAND	1634759	Cable glands M16 x 1.5, material PVDF	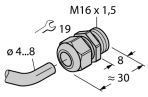
MW-12	6945003	Mounting bracket for threaded barrel devices; material: Stainless steel A2 1.4301 (AISI 304)	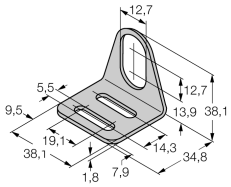
BSS-12	6901321	Mounting bracket for smooth and threaded barrel devices; material: Polypropylene	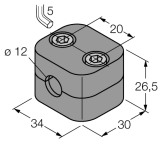

Edition • 2014-04-11T22:54:22+02:00

 Hans Turck GmbH & Co.KG • D-45472 Mülheim an der Ruhr • Witzlebenstraße 7 • Tel. 0208 4952-0 • Fax 0208 4952-264 • more@turck.com • www.turck.com