Photoelectric sensor
triangulation sensor with analog output
Q50BU

Industrial Automation

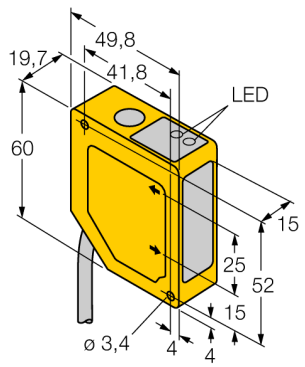

- **Foreground and background suppression**
- **Operating range 100…400 mm**
- **2 m cable, 5-pole**
- **Operating voltage 15…30 VDC**
- **analog voltage output 0…10 V**
- **selectable output response of 4 ms (fast) and 64 ms (slow)**

Type code	Q50BU
Ident no.	3063871
Operating mode	Diffuse mode sensor with adjustable foreground and background suppression
Light type	IR
Wavelength	880 nm
Repeatability	1 mm
Range	100…400 mm
Ambient temperature	-10…+55 °C
Operating voltage	15…30VDC
No-load current I_0	≤ 70 mA
Voltage output	0…10V
Readiness delay	≤ 2 s
Design	rectangular, Q50
Dimensions	49.8 x 19.7 x 60 mm
Housing material	plastic, ABS
Lens	plastic, acrylic
Connection	cable
Cable length	2 m
Cable cross section	5 x 0.5 mm²
Protection class	IP67

Wiring diagram

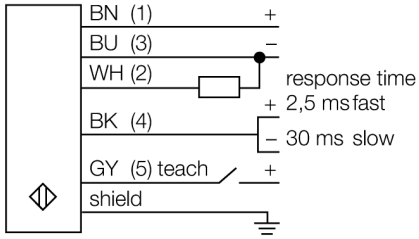

Functional principle

The function principle of the Q50 is based on optical triangulation. The emitter and the optics create a light source that is directed towards a target. The target reflects the light back to the receiver lens of the sensor, from where it then falls onto the position sensitive device (PSD) . The target's distance from the receiver determines the angle at which the light meets the receiver element. The integrated microprocessor uses this angle to analyse the target position and to create a corresponding output signal.

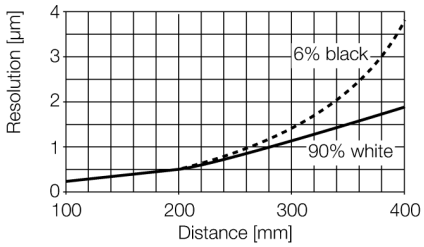

Edition • 2014-04-12T01:56:48+02:00

Hans Turck GmbH & Co.KG • D-45472 Mülheim an der Ruhr • Witzlebenstraße 7 • Tel. 0208 4952-0 • Fax 0208 4952-264 • more@turck.com • www.turck.com