Read/write head
TN-S32XL-H1147

Industrial Automation

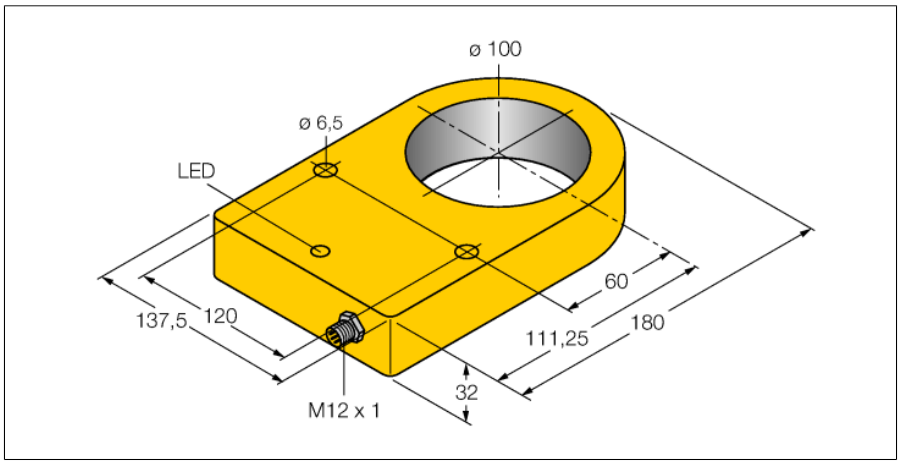

- **Rectangular, height 32 mm**
- **Plastic, ABS**
- **Every read/write head can communicate with a number of different TURCK data carriers.**
- **Powered and operated only via BL ident interface module**
- **Male M12 x 1, only for use with BL ident extension cable**

Connectors …/S2500

Type code	TN-S32XL-H1147
Ident no.	7030008
Mounting condition	non-flush
Ambient temperature	-25…+70 °C
Data transfer	inductive coupling
Operating frequency	13.56 MHz
Radio communication and protocol standards	ISO 15693
Read/write distance max.	180 mm
Output function	4-wire, read/write
Inside ring diameter D	100 mm
Design	ring sensor, S32
Dimensions	180x 137.5x 32mm
Housing material	plastic, POM, yellow
Connection	male, M12 x 1
Vibration resistance	55 Hz (1 mm)
Shock resistance	30 g (11 ms)
Protection class	IP67
MTTF	248 years acc. to SN 29500 (Ed. 99) 40 °C
Power-on indication	LED green
Packaged quantity	1

Functional principle

The HF read/write heads operating at a frequency of 13.56 MHz form a transmission zone the size of which (0…500 mm) varies, depending on the combination of read/write head and data carrier.

The read/write distances mentioned here only represent standard values measured under laboratory conditions.

The read/write distances of the data carriers for mounting in metal TW-R**-M(MF) were determined in metal.

Attainable distances may vary by up to 30 % due to component tolerances, mounting conditions, ambient conditions and material qualities (especially when mounted in metal)

Testing of the application under real operating conditions is therefore essential, especially with read/write on-the-fly!

Edition • 2014-04-11T12:00:19+02:00

Hans Turck GmbH & Co.KG • D-45472 Mülheim an der Ruhr • Witzlebenstraße 7 • Tel. 0208 4952-0 • Fax 0208 4952-264 • more@turck.com • www.turck.com