ONLINE DATA SHEET
www.mysick.com

Advanced automation light grids
MLG, MLG PROFIBUS, Profibus

MLG3-0720P811

SICK
Sensor Intelligence.

Advanced automation light grids
MLG, MLG PROFIBUS, Profibus

Model Name > MLG3-0720P811
Part No. > 1040611

At a glance

- Integrated PROFIBUS interface
- Resolutions of 10 / 20 / 30 / 50 mm and customer-specific resolutions
- Working range up to 8.5 m
- Detection heights of over 3 m and up to 240 beams possible
- Short response time
- External teach-in for optimal sensitivity settings

Your benefits

- Integrated PROFIBUS User Organization (PNO) number and GSD file for easy connection to a PLC
- Low cabling requirement reduces installation costs
- Easy-to-see light grid status information via the bus system helps avoid interrupting operation
- Different beam separation options, detection heights and output configurations ensure a reliable solution

Features

Technology:	Sender/receiver
Task:	Measurement light grid
Minimum detectable object (MDO) [1]:	Parallel beam: ≥35 mm
Beam separation:	30 mm
Number of beams:	25
Detection height:	720 mm
Configuration:	GSD data file

[1] MDO min. detectable object

Performance

Maximum range [1]:	7 m
Minimum range:	Parallel beam: ≥0 mm
Response time [2]:	Parallel beam: ≥4.75 ms
Working range [3]:	5 m

[1] No reserve for environmental issue and deterioration of the diode [2] With resistive load [3] Aperture ± 3°

© SICK AG. Subject to change without notice.

Interfaces

Output type:	1 x PNP
Inputs:	1 x PNP
Connection type:	Connector M12, 8-pin
IO-Link:	0

Mechanics/electronics

Wave length:	IR 880 nm
Supply voltage Vs [1]:	DC 18 V ... 30 V
Power consumption sender [2]:	190 mA
Power consumption receiver [3]:	175 mA
Ripple:	< 5 Vpp
Output current Imax.:	100 mA
Output load capacitive:	100 nF
Output load inductive:	1 H
Initialization time:	1 s
Dimensions (W x H x D):	34 mm x 814 mm x 29 mm
Housing material:	Aluminum
Indication:	7-segment display, LED
Synchronization:	Cable
Enclosure rating:	IP 65
Circuit protection:	Output Q short-circuit protected, Interference suppression, VS connections reverse-polarity protected
Weight:	2.156 kg
Power consumption:	190 mA [4]
Front screen:	PMMA

[1] Without load [2] [3] [4] Without load with 24 V

Ambient data

Protection class:	III
EMC:	EN 60947-5-2
Ambient temperature:	Operation: -25 ... 55 °C, Storage: -40 ... 70 °C
Ambient light safety [1]: [2]:	Direct: ≥12,500 lx, Indirect: ≥50,000 lx
Vibration resistance:	5 g, 10 Hz ... 55 Hz (IEC 68-2-6)
Shock load:	10 g／IEC 68-2-29／16 ms

[1] [2] Sunlight

© SICK AG. Subject to change without notice.

Dimensional drawing

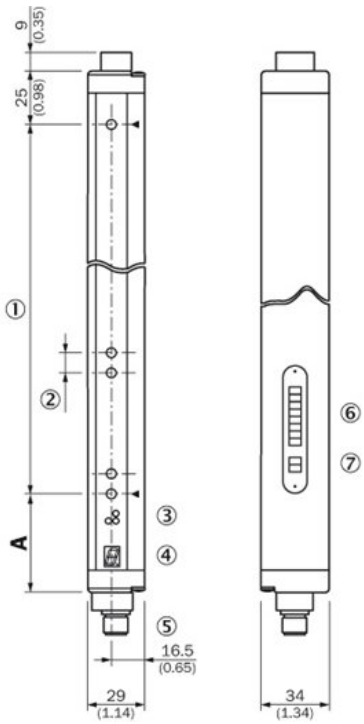

	A Distance: MLG edge - first beam
Beam separation 10 mm	49 (1.93)
Beam separation 20 mm	49 (1.93) [1] / 59 (2.32) [2]
Beam separation 30 mm	69 (2.72)
Beam separation 50 mm	89 (3.50)

[1] With even number of beams.
[2] With odd number of beams.

|1| Detection height (see optical performance)
|2| Beam separation (10, 20, 30, 50 mm)
|3| Status indicator: LEDs green, yellow, red
|4| Indicator panel, 7-segment display
|5| M12 plug, 8-pin/ M12 plug 5-pin
|6| Address setting
|7| Bus termination

Adjustments DIP switches

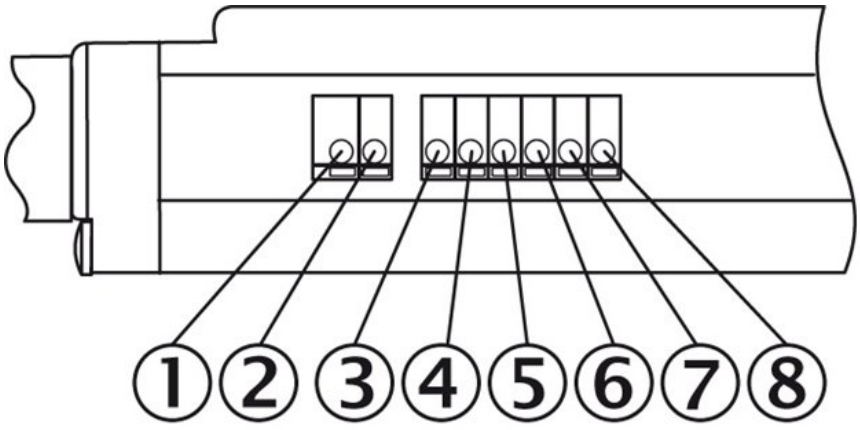

|1| Bus termination
|2| Bus termination
|3| Address setting
|4| Address setting
|5| Address setting
|6| Address setting
|7| Address setting
|8| Address setting

© SICK AG. Subject to change without notice.

Adjustments receiver

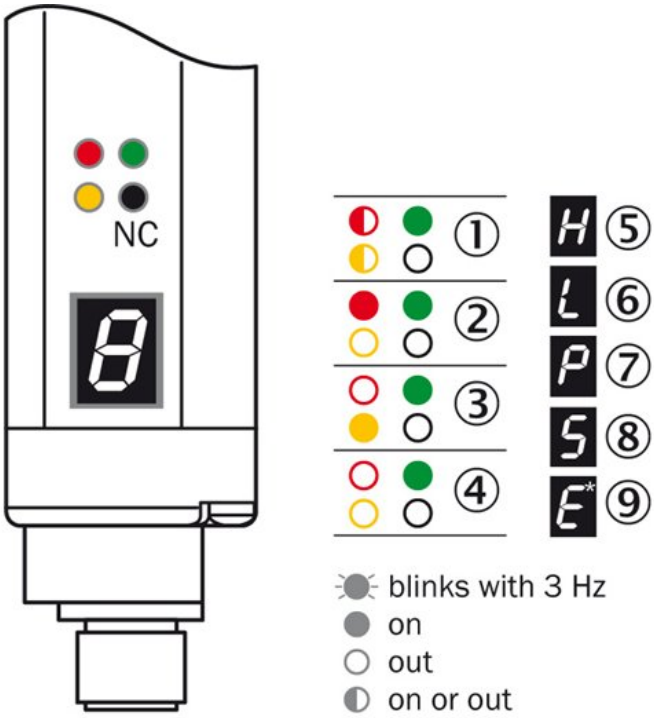

|1| Supply voltage
|2| Device error
|3| No object in the light path
|4| Pollution indication
|5| Blocked Beams Hold (BBH)
|6| Activated teach-in procedure
|7| ParamMode is active
|8| standby
|9| Error: E1 = sync. error; E2 = less receiver signal; E9 = defect

Connection type and diagram

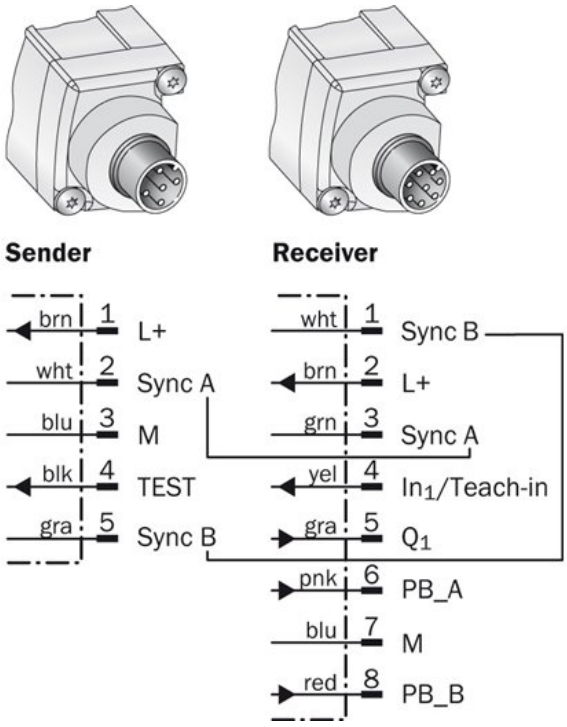

· USmod 4c int40

Australia
Phone +61 3 9457 0600
1800 334 802 – tollfree
E-Mail sales@sick.com.au

Belgium/Luxembourg
Phone +32 (0)2 466 55 66
E-Mail info@sick.be

Brasil
Phone +55 11 3215-4900
E-Mail sac@sick.com.br

Canada
Phone +1 905 771 14 44
E-Mail information@sick.com

Ceská Republika
Phone +420 2 57 91 18 50
E-Mail sick@sick.cz

China
Phone +86 4000 121 000
E-Mail info.china@sick.net.cn
Phone +852-2153 6300
E-Mail ghk@sick.com.hk

Danmark
Phone +45 45 82 64 00
E-Mail sick@sick.dk

Deutschland
Phone +49 211 5301-301
E-Mail kundenservice@sick.de

España
Phone +34 93 480 31 00
E-Mail info@sick.es

France
Phone +33 1 64 62 35 00
E-Mail info@sick.fr

Great Britain
Phone +44 (0)1727 831121
E-Mail info@sick.co.uk

India
Phone +91–22–4033 8333
E-Mail info@sick-india.com

Israel
Phone +972-4-6801000
E-Mail info@sick-sensors.com

Italia
Phone +39 02 27 43 41
E-Mail info@sick.it

Japan
Phone +81 (0)3 3358 1341
E-Mail support@sick.jp

Magyarország
Phone +36 1 371 2680
E-Mail office@sick.hu

Nederlands
Phone +31 (0)30 229 25 44
E-Mail info@sick.nl

Norge
Phone +47 67 81 50 00
E-Mail austefjord@sick.no

Österreich
Phone +43 (0)22 36 62 28 8-0
E-Mail office@sick.at

Polska
Phone +48 22 837 40 50
E-Mail info@sick.pl

România
Phone +40 356 171 120
E-Mail office@sick.ro

Russia
Phone +7-495-775-05-30
E-Mail info@sick.ru

Schweiz
Phone +41 41 619 29 39
E-Mail contact@sick.ch

Singapore
Phone +65 6744 3732
E-Mail admin@sicksgp.com.sg

Slovenija
Phone +386 (0)1-47 69 990
E-Mail office@sick.si

South Africa
Phone +27 11 472 3733
E-Mail info@sickautomation.co.za

South Korea
Phone +82 2 786 6321/4
E-Mail info@sickkorea.net

Suomi
Phone +358-9-25 15 800
E-Mail sick@sick.fi

Sverige
Phone +46 10 110 10 00
E-Mail info@sick.se

Taiwan
Phone +886-2-2375-6288
E-Mail sales@sick.com.tw

Türkiye
Phone +90 (216) 528 50 00
E-Mail info@sick.com.tr

United Arab Emirates
Phone +971 (0) 4 8865 878
E-Mail info@sick.ae

USA/México
Phone +1(952) 941-6780
1 800-325-7425 – tollfree
E-Mail info@sickusa.com

More representatives and agencies
at **www.sick.com**