Product data sheet

MLG30A-1920I10501

MLG-2

MEASURING AUTOMATION LIGHT GRIDS

SICK
Sensor Intelligence.

Ordering information

Type	Part no.
MLG30A-1920I10501	1218801

Other models and accessories ➜ www.sick.com/MLG-2

Detailed technical data

Features

Device version	Pro - Advanced functionality
Sensor principle	Sender/receiver
Minimum detectable object (MDO)	30 mm, 34 mm [1) 2) 3)]
Beam separation	30 mm
Number of beams	65
Detection height	1,920 mm
Software features (default)	
Interface RS-485	System status, virtual outputs, number of broken beams, height control (last beam)/LBB, height control (first beam)/FBB, oudside dimension, inside dimension
Baud rate RS-485	9.6 kbit/s
Q_1	Presence detection
Q2 / IN	Teach input
Teach	Standard mode
Operating mode	
Standard	✓
Transparent	✓
Dust- and sunlight-resistant	✓
Function	
Cross beam	✓
Beam blanking	✓
High-speed scan	✓

[1)] MDO min. detectable object at high measurement accuracy.
[2)] MDO min. detectable object for standard measurement accuracy.
[3)] Depending on beam separation without cross beam setting.

High measurement accuracy	✓
Applications	
Switching output	Object recognition/object width Object recognition Height classification Hole detection/hole size Outside dimension/inside dimension Object position Hole position Zone definition
Data interface	Object recognition Object height measurement Object height measurement Measurement of external dimension Measurement of inside dimension Measurement of object position Measurement of hole position
Included with delivery	1 × sender 1 × receiver 4/6 x QuickFix brackets (6 x QuickFix brackets for monitoring heights above 2 m) 1 × Quick Start Guide

[1] MDO min. detectable object at high measurement accuracy.
[2] MDO min. detectable object for standard measurement accuracy.
[3] Depending on beam separation without cross beam setting.

Mechanics/electronics

Light source	LED, Infrared light
Wave length	850 nm
Supply voltage V_s	DC 18 V ... 30 V [1]
Power consumption sender	58.25 mA [2]
Power consumption receiver	133 mA [2]
Ripple	< 5 V_{pp}
Output current $I_{max.}$	100 mA
Output load capacitive	100 nF
Output load inductive	1 H
Initialization time	< 1 s
Switching output	Push-pull: PNP/NPN
Connection type	Male connector M12, 5-pin, 0.22 m Male connector M12, 8-pin, 0.27 m M12 female connector, 4-pin, D-coded, 0.19 m
Housing material	Aluminum
Indication	LED
Enclosure rating	IP65, IP67 [3]
Circuit protection	U_V connections, reverse polarity protected Output Q short-circuit protected Interference pulse suppression
Protection class	III

[1] Without load.
[2] , Without load with 24 V.
[3] Operating in outdoor condition only with a external protection housing.

Weight	4.149 kg
Front screen	PMMA
Option	None

[1] Without load.
[2] , Without load with 24 V.
[3] Operating in outdoor condition only with a external protection housing.

Performance

Maximum range	7 m [1]
Minimum range	≥ 0 m
Operating range	5 m
Response time	6.3 ms [2]

[1] No reserve for environmental issue and deterioration of the diode.
[2] Without high speed.

Communication interface

IO-Link	✓, IO-Link V1.1
Data transmission rate	230,4 kbit/s (COM3)
Maximum cable length	20 m
Cycle time	2.3 ms
VendorID	26
DeviceID HEX	800068
DeviceID DEC	8388712
Process data length	32 Byte (TYPE_2_V) [1]
Serial	✓, RS-485
Data transmission rate	1.2 kbit/s ...921.6 kbit/s
Digital output	Q_1, Q_2
Number	2
Digital input	In_1
Number	1

[1] With an IO-Link master with V1.0, fall back to interleaved mode (consisting of TYPE_1_1 (ProcessData) and TYPE_1_2 (On-request Data)).

Ambient data

EMC	EN 60947-5-2
Ambient operating temperature	–30 °C +55 °C
Ambient storage temperature	–40 °C +70 °C
Ambient light immunity	Direct: 150,000 lx [1] Indirect: 200,000 lx [2]
Vibration resistance	Sinusoidal oscillation 10-150 Hz 5 g
Shock load	Continuous shocks 10 g, 16 ms, 1000 shocks Single shocks 15 g, 11 ms 3 per axle
UL File No.	NRKH.E181493

[1] Outdoor mode.
[2] Light resistance indirect.

Classifications

ECl@ss 5.0	27270910
ECl@ss 5.1.4	27270910
ECl@ss 6.0	27270910
ECl@ss 6.2	27270910
ECl@ss 7.0	27270910
ECl@ss 8.0	27270910
ECl@ss 8.1	27270910
ECl@ss 9.0	27270910
ECl@ss 10.0	27270910
ECl@ss 11.0	27270910
ETIM 5.0	EC002549
ETIM 6.0	EC002549
ETIM 7.0	EC002549
UNSPSC 16.0901	39121528

Dimensional drawing (Dimensions in mm (inch))

Dimensional drawing

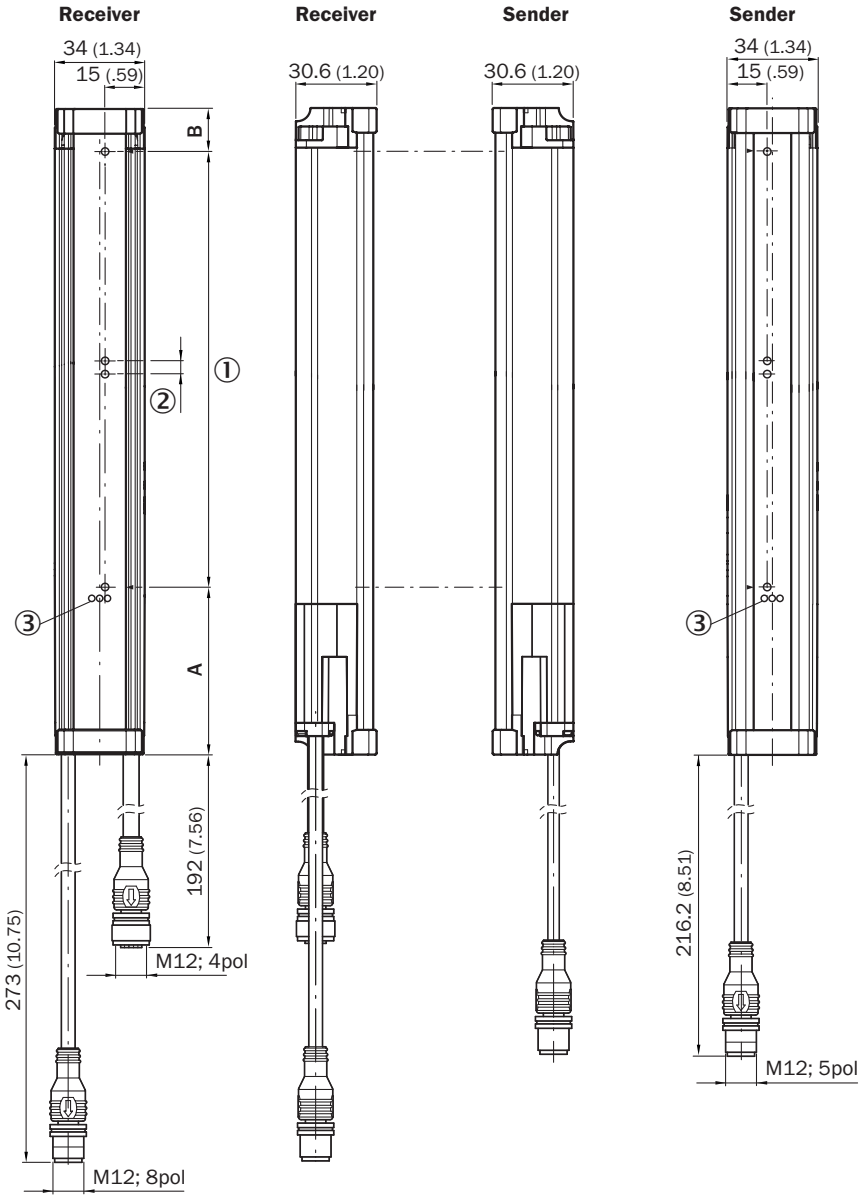

	A [1]	B [2]
Beam separation 2.5 mm	62.25 (2.45)	17.15 (0.68)
Beam separation 5 mm	63.3 (2.49)	16.1 (0.63)
Beam separation 10 mm	68.3 (2.69)	16.1 (0.63)
Beam separation 20 mm	68.3 (2.69)/78.3 (3.08) [3]	16.1 (0.63)
Beam separation 25 mm	83.3 (3.28)	16.1 (0.63)
Beam separation 30 mm	88.3 (2.69)	16.1 (0.63)
Beam separation 50 mm	108.3 (4.26)	16.1 (0.63)

[1] Distance: MLG-2 edge - first beam
[2] Distance: MLG-2 edge - last beam
[3] MLG20x-xx**40**: 68.3 mm
MLG20x-xx**80**: 78.3 mm

① Detection height (see optical performance)
② Beam separation (RM)
③ Status indicator: green, yellow, red LEDs

Adjustments

Adjustments

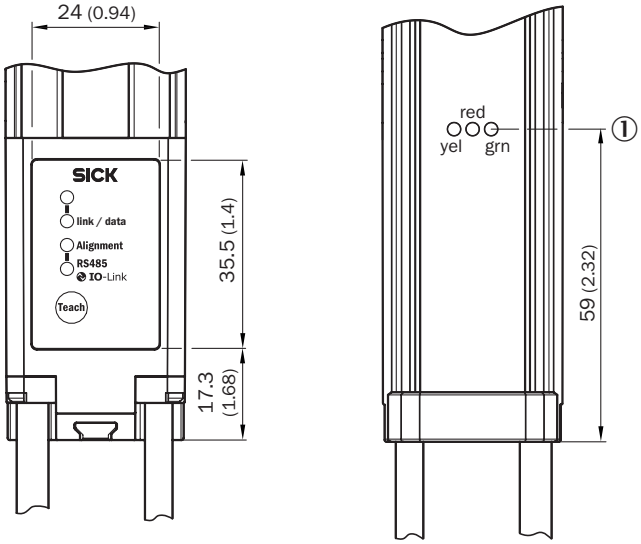

① Status indicator: green, yellow, red LEDs

Connection type and diagram

Connector M12, 5/8-pin, RS-485 interface

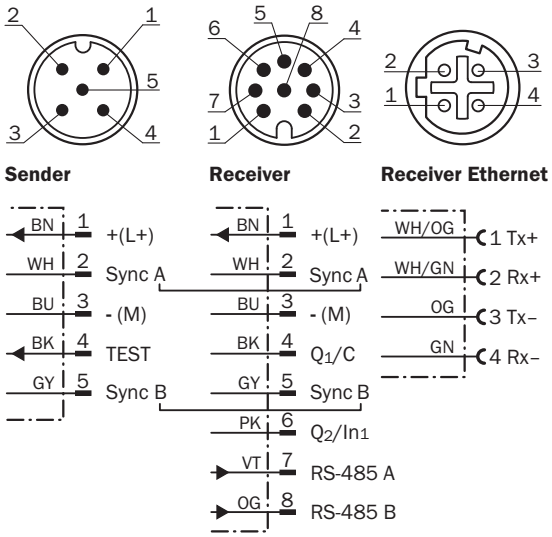

Connection type

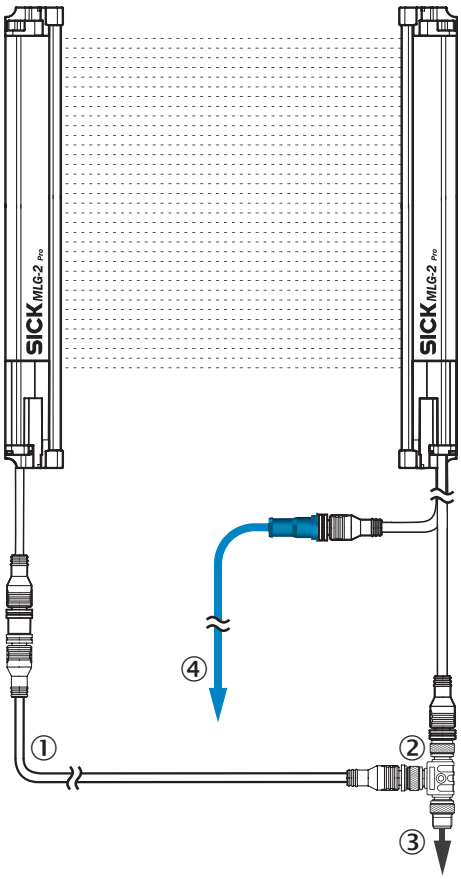

① Connection cable receiver (2096010)
② T-piece
③ Connection cable (6020664)
④ Ethernet Connection cable

Connection diagram

Connection diagram T-junction

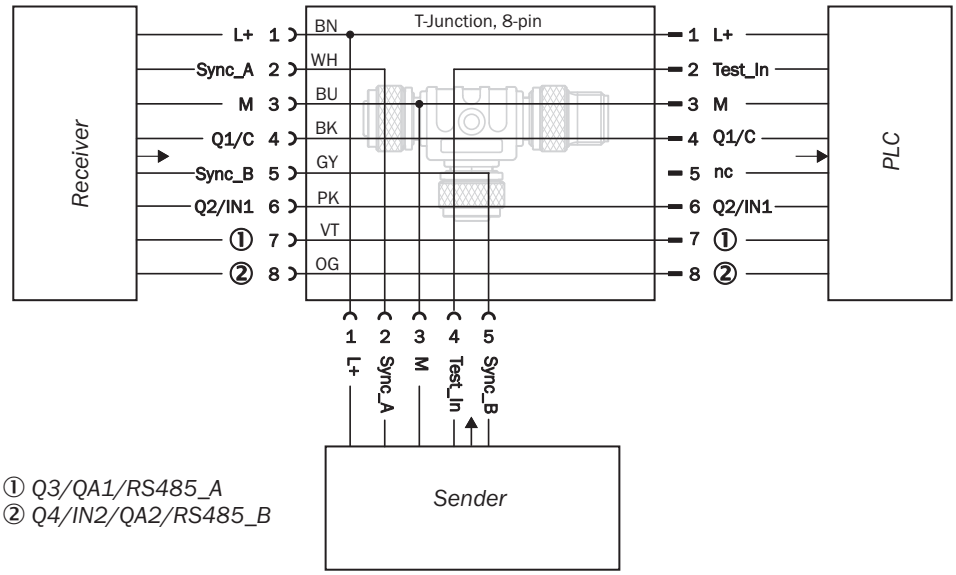

① *Q3/QA1/RS485_A*
② *Q4/IN2/QA2/RS485_B*

Recommended accessories

Other models and accessories ➜ www.sick.com/MLG-2

	Brief description	Type	Part no.
SIG200			
	SIG200-0A0412200	SIG200-0A0412200	1089794
	SIG200-0A0G12200	SIG200-0A0G12200	1102605
Distributors			
	Head A: female connector, M12, 5-pin, A-coded Head B: female connector, M12, 8-pin, A-coded Male connector M12, 8-pin, to 1 x female connector M12, 8-pin, to 1 x female connector M12, 5-pin, for connecting of a PLC	SBO-02F12-SM1	6053172
Plug connectors and cables			
	Head A: female connector, M12, 8-pin, straight Head B: Flying leads Cable: Sensor/actuator cable, special color code, PVC, shielded, 5 m	DOL-1208-G05MF	6020664
	Head A: female connector, M12, 5-pin, straight, A-coded Head B: male connector, M12, 5-pin, straight, A-coded Cable: Sensor/actuator cable, PUR, halogen-free, unshielded, 5 m	YF2A15-050UB5M2A15	2096010
	Head A: male connector, M12, 4-pin, straight, D-coded Head B: male connector, RJ45, 8-pin, straight Cable: Ethernet, twisted pair, PUR, halogen-free, shielded, 5 m	YM2D24-050EA1MRJA4	6034415

SICK AT A GLANCE

SICK is one of the leading manufacturers of intelligent sensors and sensor solutions for industrial applications. A unique range of products and services creates the perfect basis for controlling processes securely and efficiently, protecting individuals from accidents and preventing damage to the environment.

We have extensive experience in a wide range of industries and understand their processes and requirements. With intelligent sensors, we can deliver exactly what our customers need. In application centers in Europe, Asia and North America, system solutions are tested and optimized in accordance with customer specifications. All this makes us a reliable supplier and development partner.

Comprehensive services complete our offering: SICK LifeTime Services provide support throughout the machine life cycle and ensure safety and productivity.

For us, that is "Sensor Intelligence."

WORLDWIDE PRESENCE:

Contacts and other locations –www.sick.com

SICK
Sensor Intelligence.