Product data sheet

C4C-SX21010A10000

deTec

SAFETY LIGHT CURTAINS

SICK
Sensor Intelligence.

Illustration may differ

Ordering information

deTec4 Core Ex II 3GD

Resolution	Scanning range	Protective field height	System part	Type	Part no.
14 mm	10 m	2,100 mm	Sender	C4C-SX21010A10000	1220325

Other models and accessories → www.sick.com/deTec

Detailed technical data

Features

Application	Explosive areas
Ex-approvals	ATEX for gas: II 3G Ex ec op is IIC T4 Gc ATEX for dust: II 3D Ex tc IIIC T135 °C Dc
System part	Sender
Compatible receiver	1220338
Resolution	14 mm
Scanning range	10 m
Protective field height	2,100 mm
No blind zones	Yes
Synchronization	Optical synchronisation
Items supplied	Sender

Safety-related parameters

Type	Type 4 (IEC 61496-1)
Safety integrity level	SIL3 (IEC 61508) SILCL3 (IEC 62061)
Category	Category 4 (ISO 13849-1)
Performance level	PL e (ISO 13849-1)
PFH_D (mean probability of a dangerous failure per hour)	3.7×10^{-9}
T_M (mission time)	20 years (ISO 13849-1)
Safe state in the event of a fault	At least one OSSD is in the OFF state.

Functions

Protective operation	✓
Automatic calibration of the protective field width	✓

Interfaces

System connection	Male connector M12, 5-pin
Display elements	LEDs
Fieldbus, industrial network	
Integration via Flexi Soft safety controller	CANopen [1)] DeviceNet™ EtherCAT® EtherNet/IP™ Modbus TCP PROFIBUS DP PROFINET

[1)] For additional information on Flexi Soft -> www.sick.com/Flexi_Soft.

Electrical data

Protection class	III (IEC 61140)
Supply voltage V_S	24 V DC (19.2 V ... 28.8 V)
Ripple	≤ 10 %
Power consumption typical	2.4 W (DC)

Mechanical data

Dimensions	See dimensional drawing
Housing material	Aluminum extruded profile
Bending radius	
Stationary position	> 12 x cable diameter
Flexible use	> 15 x cable diameter

Ambient data

Enclosure rating	IP65 (IEC 60529) IP67 (IEC 60529)
Ambient operating temperature	0 °C ... +55 °C
Storage temperature	–30 °C ... +70 °C
Air humidity	15 % ... 95 %, Non-condensing
Vibration resistance	5 g, 10 Hz ... 55 Hz (IEC 60068-2-6)
Shock resistance	10 g, 16 ms (IEC 60068-2-27)

Other information

Wave length	850 nm
Type of light	Near-infrared (NIR), invisible

Classifications

ECl@ss 5.0	27272704
ECl@ss 5.1.4	27272704
ECl@ss 6.0	27272704
ECl@ss 6.2	27272704
ECl@ss 7.0	27272704
ECl@ss 8.0	27272704
ECl@ss 8.1	27272704
ECl@ss 9.0	27272704

ECl@ss 10.0	27272704
ECl@ss 11.0	27272704
ETIM 5.0	EC002549
ETIM 6.0	EC002549
ETIM 7.0	EC002549
UNSPSC 16.0901	46171620

Dimensional drawing (Dimensions in mm (inch))

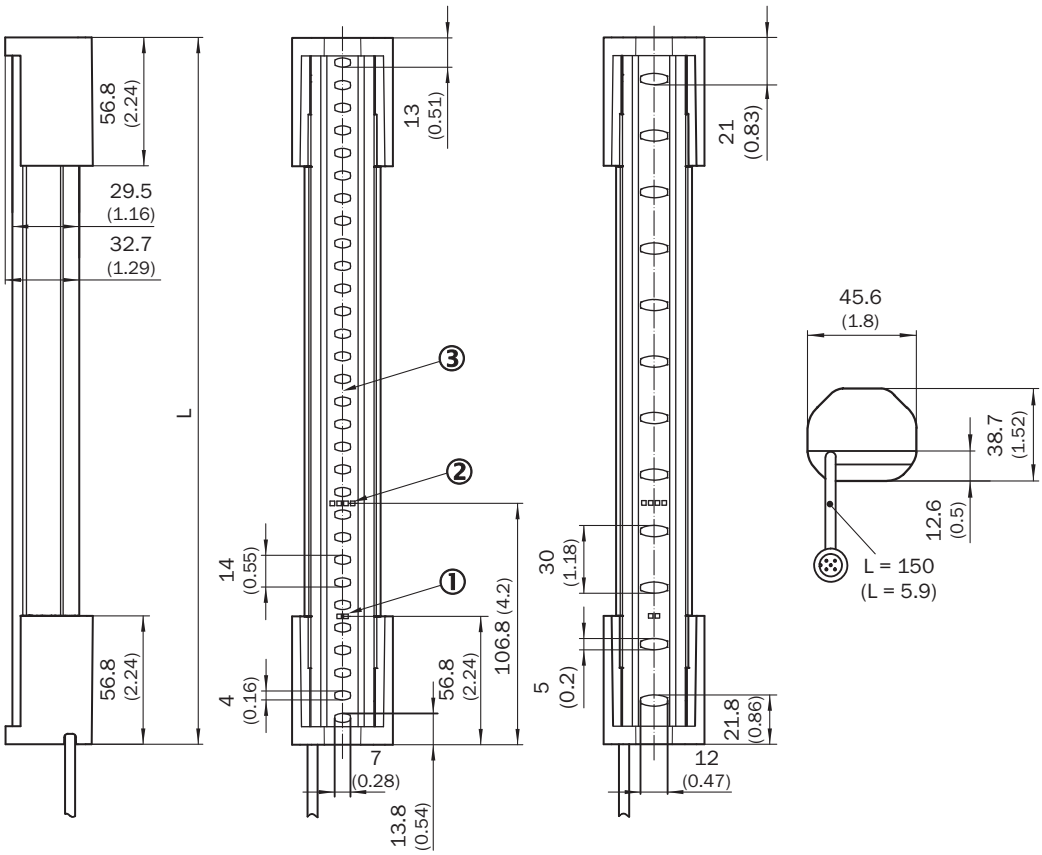

① Operating indicator
② Alignment indicator
③ Optical axis

	L
300	313
450	463
600	613
750	763
900	913
1,050	1,063
1,200	1,213
1,350	1,362
1,500	1,512

	L
1,650	1,662
1,800	1,812
1,950	1,962
2,100	2,112

Recommended accessories

Other models and accessories ➜ www.sick.com/deTec

	Brief description	Type	Part no.
Terminal and alignment brackets			
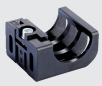	4 pieces, FlexFix bracket for 2 devices (e.g. sender and receiver), can be aligned ± 15°, including M5 screw, plastic	BEF-1SHABPKU4	2066614
	4 pieces, QuickFix bracket for 2 devices (e.g. sender and receiver), plastic	BEF-3SHABPKU4	2098710
Test and monitoring tools			
	14 mm diameter	Test rod 14 mm	2022599
Distributors			
	Head A: female connector, M12, 5-pin, A-coded Head B: male connector, M12, 5-pin, A-coded 5-pin	DSC-1205T000025KM0	6030664
Plug connectors and cables			
	Head A: female connector, M12, 5-pin, straight, A-coded Head B: Flying leads Cable: Sensor/actuator cable, PUR, halogen-free, unshielded, 2 m	YF2A15-020UB5XLEAX	2095617
	Head A: female connector, M12, 5-pin, straight, A-coded Head B: Flying leads Cable: Sensor/actuator cable, PUR, halogen-free, unshielded, 5 m	YF2A15-050UB5XLEAX	2095618
	Head A: female connector, M12, 5-pin, straight, A-coded Head B: Flying leads Cable: Sensor/actuator cable, PUR, halogen-free, unshielded, 10 m	YF2A15-100UB5XLEAX	2095619
	Head A: female connector, M12, 5-pin, straight, A-coded Head B: male connector, M12, 5-pin, straight, A-coded Cable: Sensor/actuator cable, PUR, halogen-free, unshielded, 2 m	YF2A15-020UB5M2A15	2096009
	Head A: female connector, M12, 5-pin, straight, A-coded Head B: male connector, M12, 5-pin, straight, A-coded Cable: Sensor/actuator cable, PUR, halogen-free, unshielded, 5 m	YF2A15-050UB5M2A15	2096010
	Head A: female connector, M12, 5-pin, straight, A-coded Head B: male connector, M12, 5-pin, straight, A-coded Cable: Sensor/actuator cable, PUR, halogen-free, unshielded, 10 m	YF2A15-100UB5M2A15	2096011

SICK AT A GLANCE

SICK is one of the leading manufacturers of intelligent sensors and sensor solutions for industrial applications. A unique range of products and services creates the perfect basis for controlling processes securely and efficiently, protecting individuals from accidents and preventing damage to the environment.

We have extensive experience in a wide range of industries and understand their processes and requirements. With intelligent sensors, we can deliver exactly what our customers need. In application centers in Europe, Asia and North America, system solutions are tested and optimized in accordance with customer specifications. All this makes us a reliable supplier and development partner.

Comprehensive services complete our offering: SICK LifeTime Services provide support throughout the machine life cycle and ensure safety and productivity.

For us, that is "Sensor Intelligence."

WORLDWIDE PRESENCE:

Contacts and other locations –www.sick.com

SICK
Sensor Intelligence.