SIEMENS

Product data sheet 3RW4456-6BC34

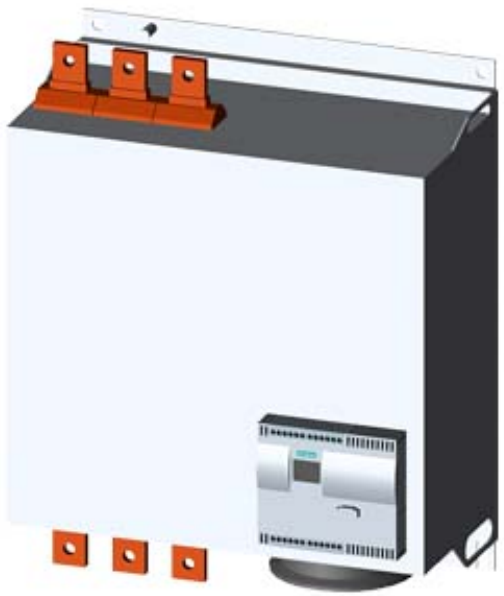

SIRIUS SOFT STARTER, VALUES AT 460V, 50 DEG., STANDARD: 693A, 600HP, INSIDE-DELTA CIRCUIT 3: 1200A, 1050HP, 200-460V AC, 115V AC, SCREW TERMINALS

General details:		
product brand name		SIRIUS
Product equipment		
• integrated bridging contact system		Yes
• thyristors		Yes
Product function		
• intrinsic device protection		Yes
• motor overload protection		Yes
• evaluation of thermal resistor motor protection		Yes
• reset external		Yes
• adjustable current limitation		Yes
• inside-delta circuit		Yes
Product component / outlet for enine brake		Yes
Item designation		
• according to DIN EN 61346-2		Q
• according to DIN 40719 extendable after IEC 204-2 / according to IEC 750		G

Power Electronics:		
product designation		soft starters for high feature applications
Operating current		

subject to modifications
© Copyright Siemens AG 2013

• at 40 °C / rated value	A	780
• at 50 °C / rated value	A	693
• at 60 °C / rated value	A	615
• for three-phase servomotors / at 3-phase root switching		
• at 40 °C / rated value	A	1,351
• at 50 °C / rated value	A	1,200
• at 60 °C / rated value	A	1,065
Emitted mechanical power / for three-phase servomotors		
• at 230 V / at standard switching / at 40 °C		
• rated value	W	250,000
• at 400 V / at standard switching / at 40 °C		
• rated value	W	450,000
• at 230 V / at 3-phase root switching / at 40 °C		
• rated value	W	450,000
• at 400 V / at 3-phase root switching / at 40 °C		
• rated value	W	800,000
yielded mechanical performance (hp) / for three-phase squirrel cage motors / at 200/208 V / at standard circuit / at 50 °C / rated v alue	hp	200
Operating frequency		
• rated value	Hz	50 … 60
Relative negative tolerance / of the operating frequency	%	-10
Relative positive tolerance / of the operating frequency	%	10
Operating voltage / with standard circuit / rated value	V	200 … 460
Relative negative tolerance / of the operating voltage / with standard circuit	%	-15
Relative positive tolerance / of the operating voltage / with standard circuit	%	10
Operating voltage / at 3-phase root switching / rated value	V	200 … 460
Relative negative tolerance / of the operating voltage / with inside-delta circuit	%	-15
Relative positive tolerance / of the operating voltage / with inside-delta circuit	%	10
Minimum load in % of I_M	%	8
Adjustable rated current / of the motor / for motor overload protection / minimum	A	156
Continuous operating current in % of I_e / at 40°C	%	115
Active power loss / at operating current / at 40°C / during operating phase / typical	W	214

Control electronics:

Type of voltage / of the controlled supply voltage		AC

subject to modifications
© Copyright Siemens AG 2013

Control supply voltage frequency / 1 / rated value	Hz	50
Control supply voltage frequency / 2 / rated value	Hz	60
Relative negative tolerance / of the control supply voltage frequency	%	-10
Relative positive tolerance / of the control supply voltage frequency	%	10
Control supply voltage / 1		
• at 50 Hz / for AC	V	115
• at 60 Hz / for AC	V	115
Relative negative tolerance / of the control supply voltage / at 60 Hz / for AC	%	-15
Relative positive tolerance / of the control supply voltage / at 60 Hz / for AC	%	10
Type of display / for fault signal		Display

Mechanical design:

Width	mm	510
Height	mm	640
Depth	mm	290
Type of mounting		screw fixing
mounting position		bei senkrechter Montageebene +/-90° drehbar, bei senkrechter Montageebene +/- 22,5° nach vorne und hinten kippbar
Distance, to be maintained, to the ranks assembly		
• upwards	mm	100
• sidewards	mm	5
• downwards	mm	75
Installation altitude / at a height over sea level	m	5,000
Cable length / maximum	m	500
Number of poles / for main current circuit		3

Electrical connections:

Design of the electrical connection		
• for main current circuit		busbar connection
• for auxiliary and control current circuit		screw-type terminals
Number of NC contacts / for auxiliary contacts		0
Number of NO contacts / for auxiliary contacts		3
Number of change-over switches / for auxiliary contacts		1
Type of the connectable conductor cross-section / for DIN cable lug / for main contacts		
• finely stranded		50 ... 240 mm2
• stranded		70 ... 240 mm2
Type of the connectable conductor cross-section		

subject to modifications
© Copyright Siemens AG 2013

• for AWG conductors / for main contacts		2/0 ... 500 kcmil
Type of the connectable conductor cross-section		
• for auxiliary contacts		
• solid		2x (0.5 ... 2.5 mm²)
• finely stranded / with conductor end processing		2x (0.5 ... 1.5 mm²)
• for AWG conductors / for auxiliary contacts		2x (20 ... 14)
• finely stranded / with wire end proc		2x (20 ... 16)

Ambient conditions:

Ambient temperature		
• during operating	/ °C	60
• during storage	°C	-25 … +80
Derating temperature	°C	40
Protection class IP		IP00

Certificates/approvals:

General Product Approval				EMC	Shipping Approval
CCC	CSA	GOST	UL	C-TICK	LRS

other	
Declaration of Conformity	Environmental Confirmations

UL/CSA ratings

yielded mechanical performance (hp) / for three-phase squirrel cage motors		
• at 220/230 V / at standard circuit		
• at 50 °C / rated v alue	hp	250
• at 460/480 V / at standard circuit		
• at 50 °C / rated v alue	hp	600
• at 200/208 V / at inside-delta circuit / at 50 °C / rat ed value	hp	450
• at 220/230 V / at inside-delta circuit / at 50 °C / rat ed value	hp	500
• at 460/480 V / at inside-delta circuit / at 50 °C / rat ed value	hp	1,050
Contact rating designation / for auxiliary contacts / according to UL		B300 / R300

Further information:

© Copyright Siemens AG 2013

Information- and Downloadcenter (Catalogs, Brochures,…)
http://www.siemens.com/industrial-controls/catalogs

Industry Mall (Online ordering system)
http://www.siemens.com/industrial-controls/mall

CAx-Online-Generator
http://www.siemens.com/cax

Service&Support (Manuals, Certificates, Characteristics, FAQs,...)
http://support.automation.siemens.com/WW/view/en/3RW4456-6BC34/all

Image database (product images, 2D dimension drawings, 3D models, device circuit diagrams, ...)
http://www.automation.siemens.com/bilddb/cax_en.aspx?mlfb=3RW4456-6BC34

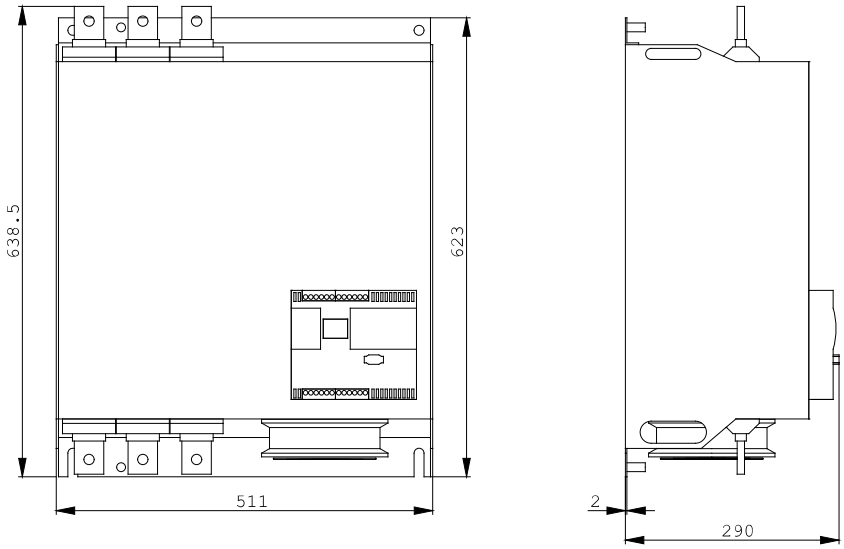

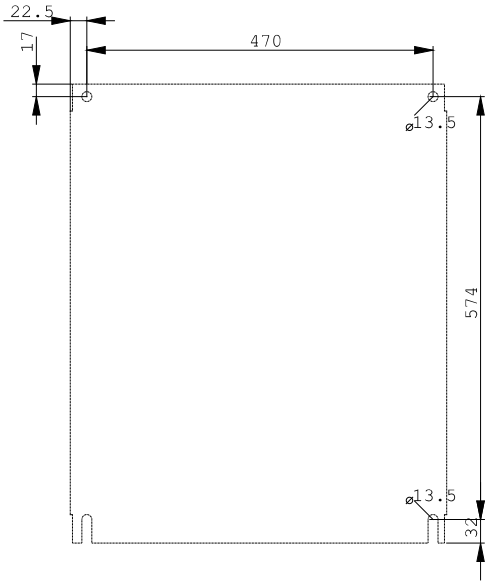

last change: Feb 7, 2013

subject to modifications
© Copyright Siemens AG 2013