SIEMENS

Product data sheet 3SE5122-0CR01

SIRIUS POSITION SWITCH METAL ENCLOSURE 56MM WIDE DEVICE CONNECTION 3X (M20X1.5) 1NO/1NC SNAP-ACTION CONTACTS SPRING ROD ACTUATOR 142.5 MM TOTAL LENGTH,
PLASTIC PLUNGER

Manufacturer article number		
• of the basic unit included in the scope of supply		3SE5122-0CA00
• of the actuator head for position switches included in the scope of supply		3SE5000-0AR01

General technical details:		
product designation		standard position switch
Explosion protection category for dust		none
Insulation voltage		
• rated value	V	400
Degree of pollution		class 3
Thermal current	A	6
Operating current		
• at AC-15		
• at 24 V / rated value	A	6
• at 125 V / rated value	A	6
• at 230 V / rated value	A	6
• at 400 V / rated value	A	4
• at DC-13		
• at 24 V / rated value	A	3
• at 125 V / rated value	A	0.55
• at 230 V / rated value	A	0.27

subject to modifications
© Copyright Siemens AG 2013

• at 400 V / rated value	A	0.1
Continuous current		
• of the slow DIAZED fuse link	A	6
• of the quick DIAZED fuse link	A	10
• of the C characteristic circuit breaker	A	1
Mechanical operating cycles as operating time		
• typical		10,000,000
Electrical operating cycles as operating time		
• with contactor 3RH11, 3RT1016, 3RT1017, 3RT1024, 3RT1025, 3RT1026 / typical		10,000,000
• at AC-15 / at 230 V / typical		100,000
Electrical operating cycles in one hour		
• with contactor 3RH11, 3RT1016, 3RT1017, 3RT1024, 3RT1025, 3RT1026		6,000
Repeat accuracy	mm	0.05
Design of the contact element		snap-action contacts
Number of NC contacts		
• for auxiliary contacts		1
Number of NO contacts		
• for auxiliary contacts		1
Resistance against vibration		0.35 mm / 5g
Resistance against shock		30g / 11 ms
Ambient temperature		
• during operating	°C	-25 … +85
• during storage	°C	-40 … +90
Width of the sensor	mm	56
Material		
• of the enclosure		metal
Material / of the housing / of the switch head		plastic
Design of the operating mechanism		total length = 142.5 mm (spring 50 mm, plastic plunger 50 mm)
Actuating speed	mm/s / m/s	0.1 … 1
Protection class IP		IP65/IP67
mounting position		any
Cable gland version		3 x (M20 x 1.5)
Design of the electrical connection		screw-type terminals
Item designation		
• according to DIN 40719 extendable after IEC 204-2		S
• according to DIN EN 61346-2		B

Certificates/approvals:

© Copyright Siemens AG 2013

General Product Approval				Functional Safety / Safety of Machinery	Declaration of Conformity
CCC	GOST	UL	VDE	VDE	EG-Konf.
Test Certificates	**other**				
Special Test Certificate	Confirmation				

Further information:

Information- and Downloadcenter (Catalogs, Brochures,…)
http://www.siemens.com/industrial-controls/catalogs

Industry Mall (Online ordering system)
http://www.siemens.com/industrial-controls/mall

CAx-Online-Generator
http://www.siemens.com/cax

Service&Support (Manuals, Certificates, Characteristics, FAQs,...)
http://support.automation.siemens.com/WW/view/en/3SE5122-0CR01/all

Image database (product images, 2D dimension drawings, 3D models, device circuit diagrams, ...)
http://www.automation.siemens.com/bilddb/cax_en.aspx?mlfb=3SE5122-0CR01

© Copyright Siemens AG 2013

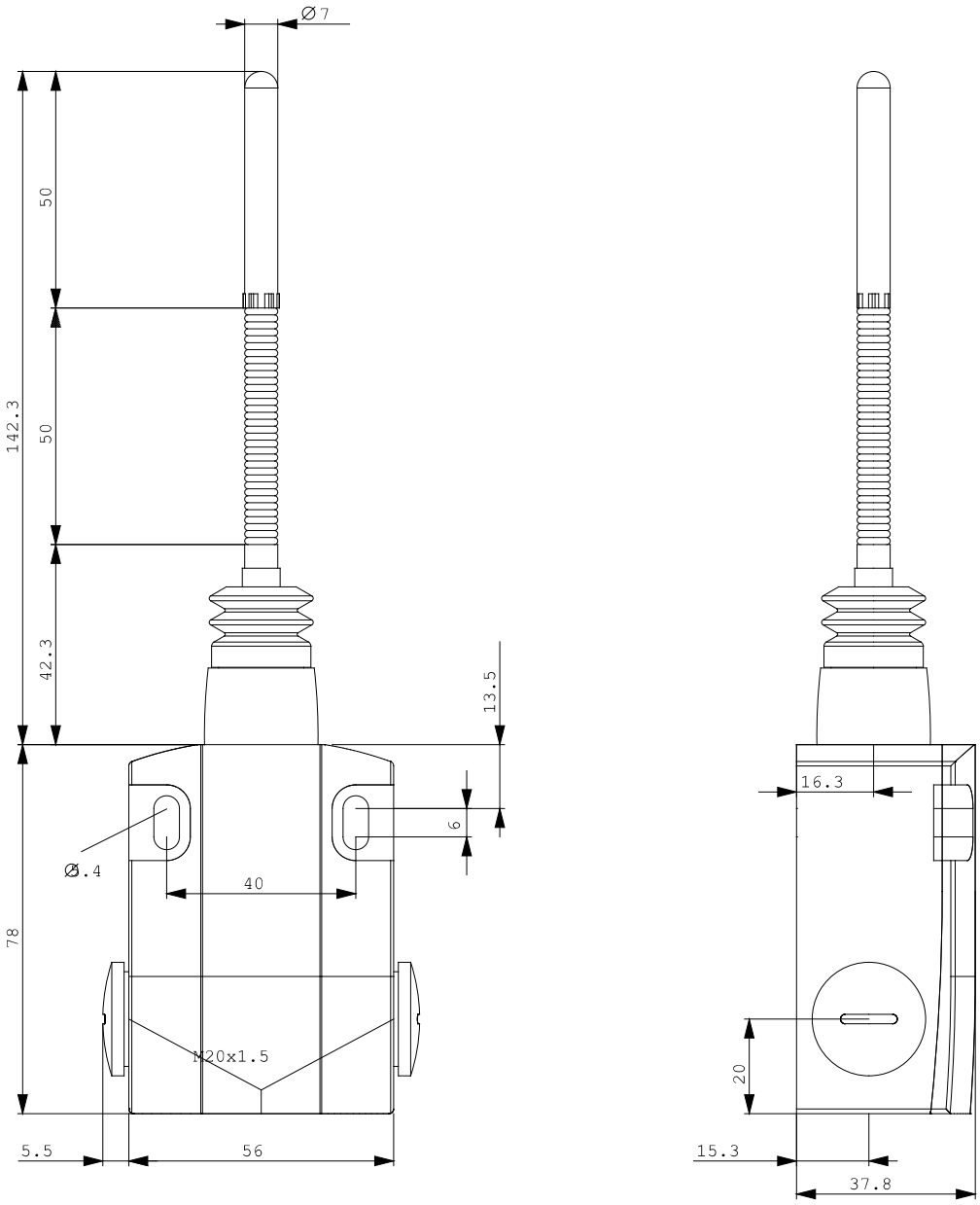

subject to modifications
© Copyright Siemens AG 2013

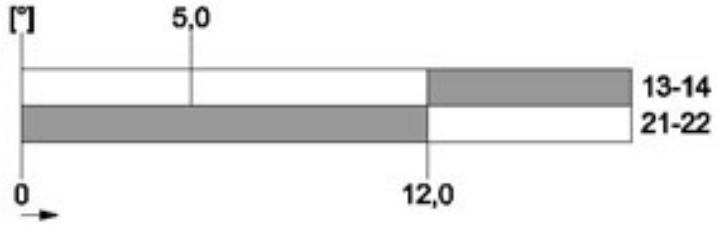

last change: Feb 18, 2013

subject to modifications
© Copyright Siemens AG 2013